HP 3000 Computer Systems

HEWLETT hp PACKARD

Transaction processing systems for business and industry

Price/configuration guide

Table of Contents

Description	Page No.
HP 3000 Computer Systems	1
Series 33 – Series II – Series III Comparison Chart	2
Series 33 and Series III Standard Configurations	3
How to Configure an HP 3000 Series 33 System	4
Series 33 Configuration Guide	5
Series 33 Configuration Diagram	6
How to Configure an HP 3000 Series II or Series III System	7
Series II, Models 6 and 8 Configuration Guide	8
Series II, Model 6 Configuration Diagram	9
Series II, Model 8 Configuration Diagram	10
Series III Configuration Guide	11
Series III Configuration Diagram	12
Series II, Model 6 Memory Expansion Upgrade	13
Series II, Model 8 Upgrade	14
Series II to Series III Upgrade	15
Series III Memory Expansion	16
Products Supported on HP 3000 Systems	17
HP 3000 Software Support	18
Software Price Summary	19
Software Ordering Guide	20
System Pricing Guide	21
Series 33 Configuration Example	41
Series III Configuration Example	42
Peripherals Site Preparation Data	43

HP Computer Museum
www.hpmuseum.net

For research and education purposes only.

Computer Museum

HP 3000 Computer Systems

The HP 3000 family of computers, comprised of Series 33, Series II and Series III systems, offers you a broad range of capabilities and performance. The expandable hardware configurations and upward software compabibility of all the models allow you to choose the system that best fits your current needs, while protecting your investment for the future. A full range of peripherals, programming languages, data base management packages, and hardware/software options for data communications exist for additional system enhancement. To simplify a comparison of the various systems, the comparison chart outlines the features of each.

HP 3000 Series 33 System

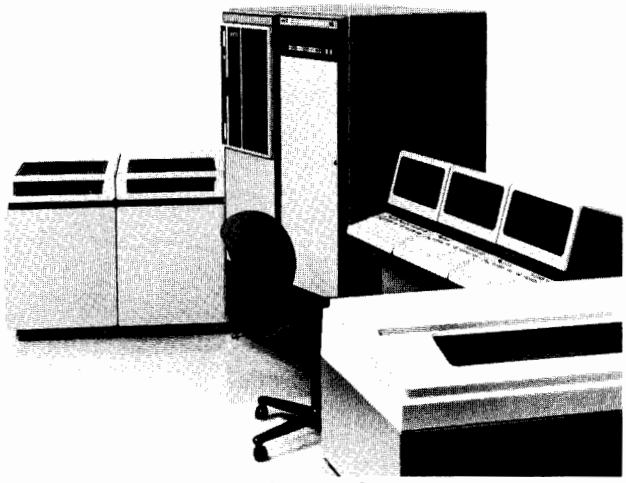

HP 3000 Series III System

Series 33—Series II—Series III Comparison Chart

Series 33

Hardware supplied

256kb to 1024kb fault control semiconductor memory
Up to 31 terminals
64-bit floating point precision
214 instructions (208 in firmware)
Up to 4 pairs of asynchronous data communications controllers
Up to 2 printers and controllers
103 and 202S modem control included
4 Mb/second intermodule bus
1 Mb/second general I/O channels
6 standard I/O slots (additioinal 7 slots available)
Up to 7 additional 7906s, 7920s, or 7925s
Up to 4 magnetic tapes
Flexible disc – 1 Mb

Software supplied

MPE III virtual memory multiprogramming operating system
Languages available include:

- COBOL
- RPG
- FORTRAN
- BASIC (compiler & interpreter)
- SPL

File access and organization
  Sequential
  Direct (Random)
  IMAGE/QUERY
    Up to 32 data extents.
    Data set can cross volume boundary.
  KSAM/3000
    16 keys
    Concurrent update and inquiry capability.
Additional application software
  VIEW/3000
  DEL/3000
  Scientific Library
Terminal type recognition automatic.
Power fail/auto restart.
Up to 255 open files per program.
Spoolfile size is limited to 32 configurable extents.
Up to 32 file extents.
File can cross volume boundary on extent boundary.

Series II—Series III

Hardware supplied

256kb to 512kb fault control semiconductor memory in Series II
256kb to 2048kb fault control semiconductor memory in Series III
Up to 63 terminals
64-bit floating point precision
209 firmware instructions
Up to 4 asynchronous terminal controllers
Up to 4 printers and controllers
103 modem control included
1.9 Mb/second selector channel
10 standard to 23 I/O slots (Model 6)
23 standard I/O slots (Model 8)
10 standard to 23 I/O slots (Series III)
Up to 7 additional 7920s or 7925s
Up to 7 additional magnetic tapes
Card reader/punch optional
  Read 200 cards/minute
  Punch/print 45 to 75 cards/minute

Software supplied

MPE III virtual memory multiprogramming operating system
Languages available include:

- COBOL
- RPG
- FORTRAN
- BASIC (compiler & interpreter)
- SPL
- APL

File access and organization
  Sequential
  Direct (Random)
  IMAGE/QUERY
    Up to 32 data extents.
    Data set can cross volume boundary.
  KSAM/3000
    16 keys.
    Concurrent update and inquiry capability.
Communications
  RJE/3000 DS/3000 MTS/3000 MRJE/3000
Additional application software
  VIEW/3000 SIS/3000
  DEL/3000 Scientific Library CIS/3000
Terminal type recognition automatic.
Power fail/auto restart.
Up to 255 open files per program.
Spoolfile size is limited to 32 configurable extents.
Up to 32 file extents.
File can cross volume boundary on extent boundary.

HP 3000 Series 33 Standard Configuration

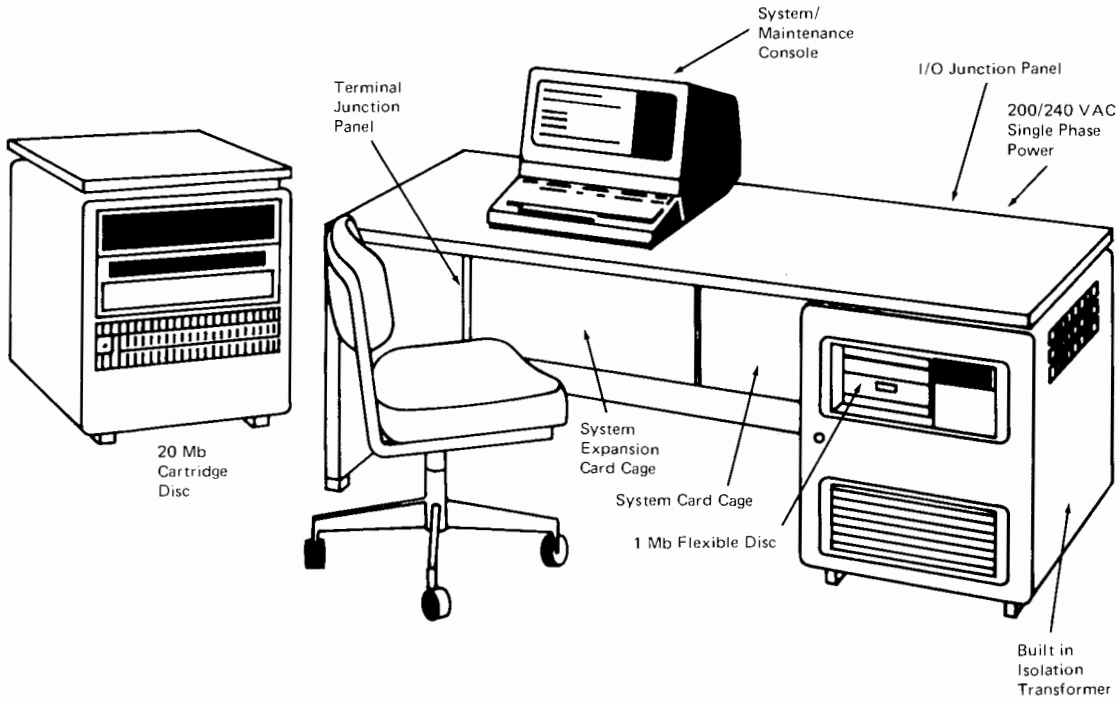

HP 3000 Series III Standard Configuration

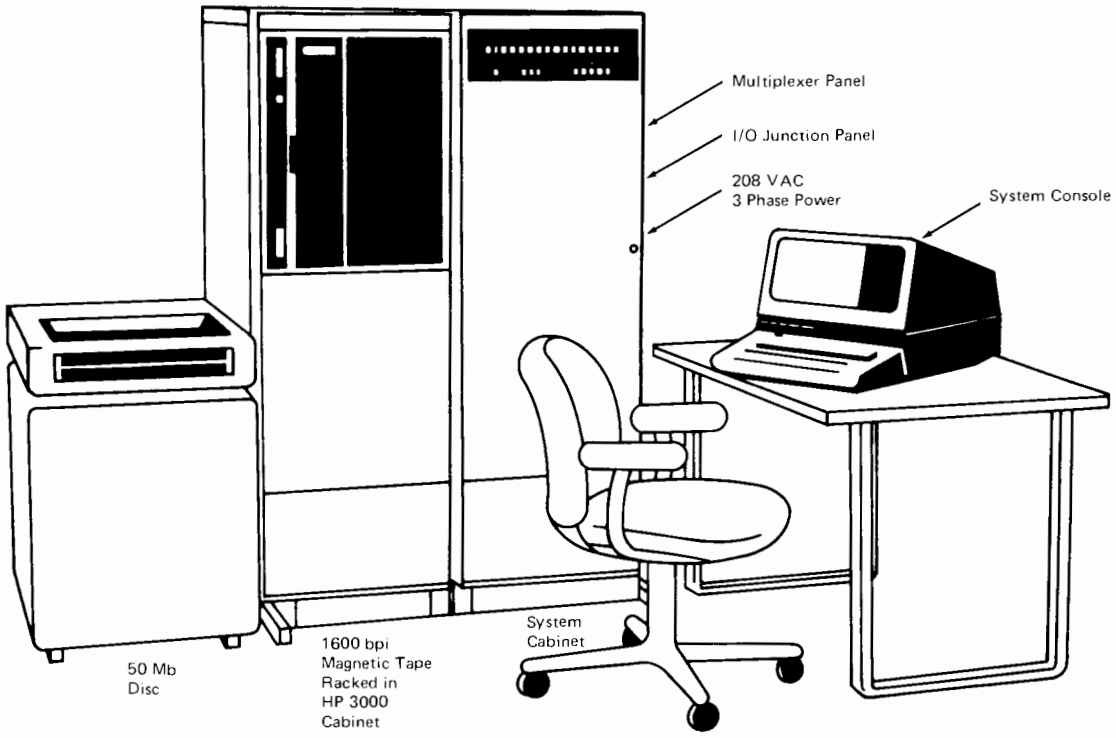

How to Configure an HP 3000 Series 33 System

To aid in configuring an HP 3000 Series 33 system, a diagram is included on a following page. By following the steps indicated, it is simple to plan a new system or add to an existing one.

Selection options

When choosing options denoted by "circles", be certain to write the number of the interface slot which the option will occupy in the open circle beside the selected option, then cross out the numbered circle connected to the Intermodule Bus (IMB) to show that interface slot is no longer available. For example,

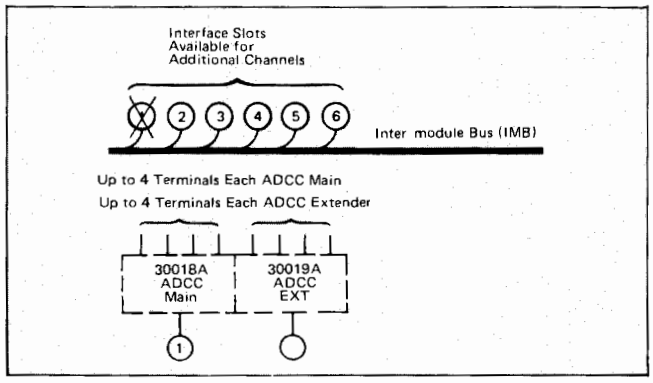

As a result, the options that have been chosen and the interface slots they occupy will be evident at a glance. DO NOT EXCEED THE TOTAL NUMBER OF AVAILABLE INTERFACE SLOTS ON THE INTER MODULE BUS.

Devices identified with triangles or squares will function only in the positions designated by matching geometric shapes.

Equipment Supplied (Standard Configuration). Products in "white" outlined by "solid lines".

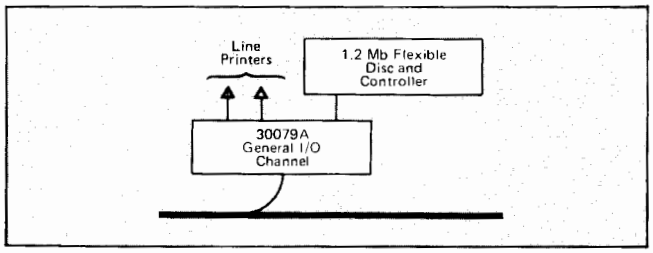

Optional Equipment. Products in "gray" outlined by "dashed lines".

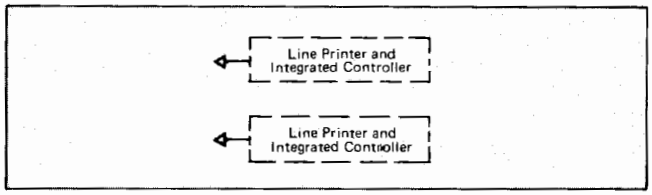

Connecting Additional Channels. Spare interface slots (numbered "circles") connected to the IMB are available for additional devices and can be interfaced to either Asynchronous Data Communication Controllers (ADCC's) or General I/O Channels (GIC's) identified with attached "circles".

Connecting Additional Terminals. Two Asynchronous Data Communications controllers are supplied in the base system (ADCC Main and ADCC Extender). These permit the connection of the system/maintenance console and up to seven terminals. Additional terminal capacity may be added in groups of four to allow interfacing up to 32 terminals including the system console. Always add an ADCC extender before another ADCC main.

Disc Drives. One 19.6 Mb 7906 disc subsystem with controller built-in is supplied in the base system connected to a high speed general I/O channel (GIC). Optionally, 50 Mb or 120 Mb disc subsystems are available. The controller can handle a total of eight drives, hence 960 Mb maximum capacity for the system.

Magnetic Tape Units. One Master 1600 bpi magnetic tape drive with integrated controller is available and must be attached to a dedicated general I/O channel (GIC). Up to three slave magnetic tape drives may be attached. All magnetic tape drives are enclosed in separate lowboy cabinets with sloping front access to the drives.

Line Printers. A line printer with integrated controller can be attached to the second general I/O channel supplied with the base system. This is the same GIC that interfaces to the flexible disc. A maximum of two line printers, each with its own integrated controller, may be added to the system.

Additional Memory. 256 kb of fault control memory is supplied with the base system. System memory sizes of 512 kb, 768 kb, and 1024 kb are also available. Up to 1024 kb, order the proper number of 128 kb memory array boards to constitute the desired size system.

I/O Expansion. To obtain additional I/O slots (beyond the six in the base system) order an expansion kit (30416A).

Environmental specifications

The following specifications apply to any HP 3000 Series 33 configured with any combination of the peripherals listed. It is not necessary to consider each device separately.

Temperature (operating)

59° – 95°F (15° – 35°C)

Relative Humidity

30 – 80% non-condensing. 60% optimal.

Line Voltage

200/210/220/230/240 VAC +4%, -10% single phase

Line Frequency

50 or 60 Hz ±10%

Maximum rate of Temperature Change

18°F/Hr (10°C/Hr)

HP 3000 Series 33 Configuration Guide

Hardware supplied

- Central processing unit (CPU)
- 214 instructions (208 in firmware)
- System clock
- 8 asynchronous terminal ports via two asynchronous data communications controllers (ADCCs)
- Modem support (for type 103/202S)
- General I/O channel for discs
- General I/O channel for line printers and flexible disc
- 256 kb fault control memory with memory controller
- System desk, mainframe, one card cage, and power supplies
- System console/maintenance console
- 7906 19.6 Mb disc with controller
- 1.2 Mb flexible disc with controller (double sided)
- 6 spare I/O slots and space for 1024 kb memory
- Room for 31 terminals plus system console

Software supplied

- Multiprogramming Executive III operating system (MPE III)

HP 3000 Series Fundamental Operating Software (Initial payment in system price) which includes:

- System Programming Language (SPL)
- Text editor (EDIT)
- File-copying utility (FCOPY)
- Sort and merge package (SORT)
- Compiler library

Site preparation data for standard Series 33

	HP7906 20 Mb DISC DRIVE		SYSTEM CABINET		CRT CONSOLE	
	USA (60 Hz)	NON-USA (50 Hz)	USA (60 Hz)	NON-USA (50 Hz)	USA (60 Hz)	NON-USA (50 Hz)
VOLTAGE	115	230	200-240	200-240	115	230
PHASES	1	1	1	1	1	1
CURRENT PER PHASE	6.3A	3.7A	24.0A	24.0A	2.2A	1.0A
HEAT OUTPUT (per hour)	2800 btu	700 kcal	5300 btu	1325 kcal	863 btu	230 kcal
WEIGHT	270 lb	122 kg	710 lb	322 kg	50 lb	23 kg
SIGNAL CABLE LENGTH	Note 1	Note 1	–	–	Note 2	Note 2

Note 1: Up to seven slave disc drives may be daisy chained from a controller within the master drive. The cable length from system to master drive is 19.5 ft (6M). The cable length between drives is 8 ft (2.4M). In addition, each slave drive has a cable back to the controller. The length of this cable for each drive is 50 ft (15.2M). The maximum cumulative length of daisy-chained cable is 74 ft (22.5M).

Note 2: The system console is cabled to remain on the system table.

Maximum configuration diagram for Series 33

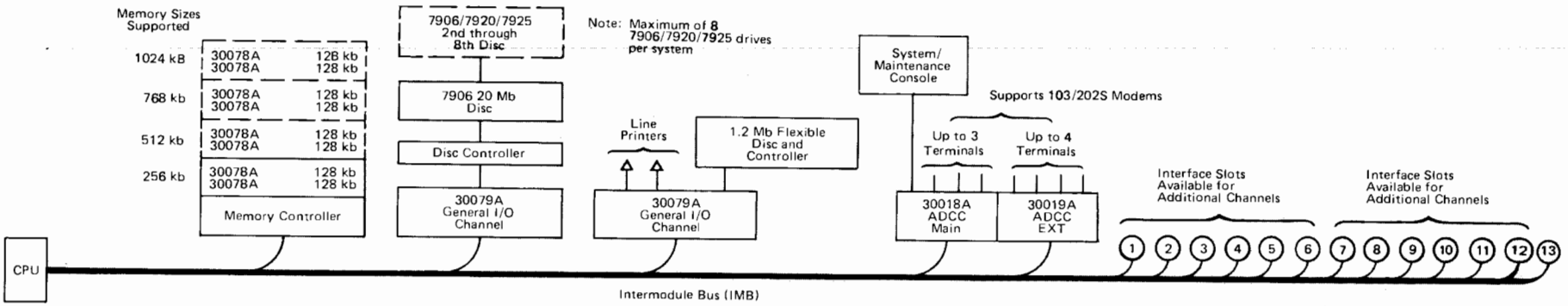

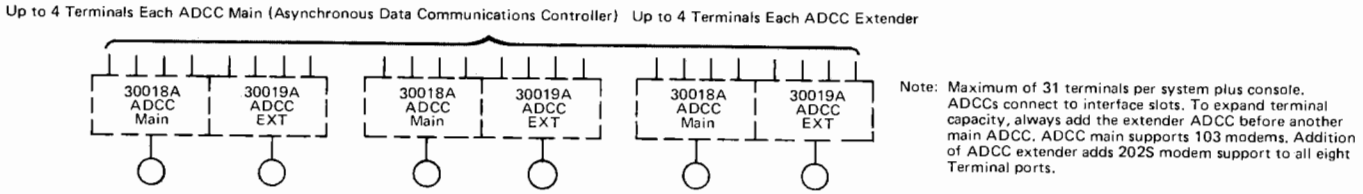

Note: Maximum of 31 terminals per system plus console. ADCCs connect to interface slots. To expand terminal capacity, always add the extender ADCC before another main ADCC. ADCC main supports 103 modems. Addition of ADCC extender adds 202S modem support to all eight Terminal ports.

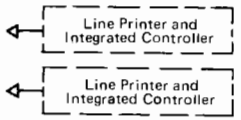

Note: Maximum of 2 line printers per system (Models 2608A-333 or 2631A-333)

Line printers attach to General I/O Channel with 7902 flexible disc.

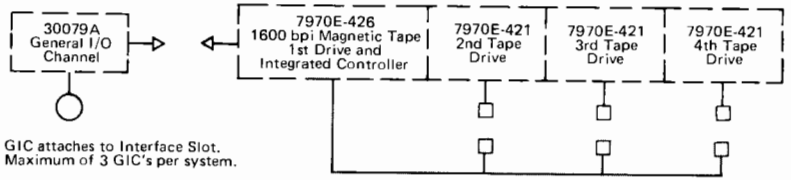

Note: Maximum of 4 tape drives per system. Magnetic tape drive controller attaches to a dedicated general I/O channel.

SOFTWARE		
	Fundamental Operating Software	32208A KSAM
	32102B FORTRAN Compiler	32209A VIEW
	32104A RPG Compiler	
	32205B Scientific Library	
	32206A Data Entry Library	
	32111A BASIC	
	32213C COBOL Compiler	
	32235B IMAGE/QUERY	

How to Configure an HP 3000 Series II or Series III System

To aid in configuring an HP 3000 Series II or Series III system, several diagrams are included on the following pages. In these diagrams, equipment originally supplied with a standard model is shown in white, while optional equipment is in gray. By following the steps indicated, it is simple to plan a new system or add to an existing one.

Selecting options

When choosing options denoted by "circles", be certain to write the number of the interface slot which the option will occupy in the open circle beside the selected option; then, cross out the numbered circle connected to the IOP Bus to show that the interface slot is no longer available. For example:

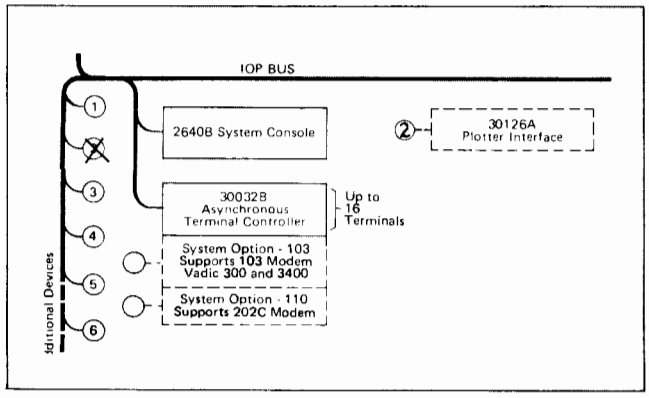

As a result, the options that have been chosen and the interface slots they occupy will be evident at a glance. DO NOT EXCEED THE TOTAL NUMBER OF AVAILABLE INTERFACE SLOTS ON THE IOP BUS.

Devices identified with triangles or squares will function only in the positions designated by matching geometric shapes.

Equipment Supplied (Standard Configuration). Products in "white" outlined by "solid lines".

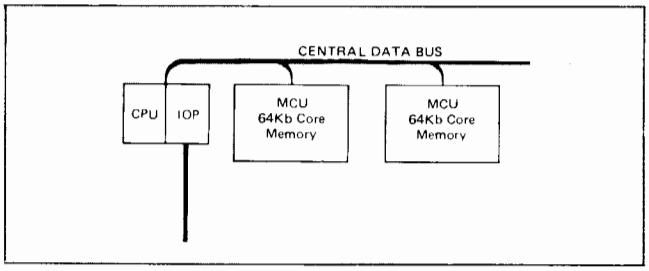

Optional Equipment. Products in "gray" outlined by "dashed lines".

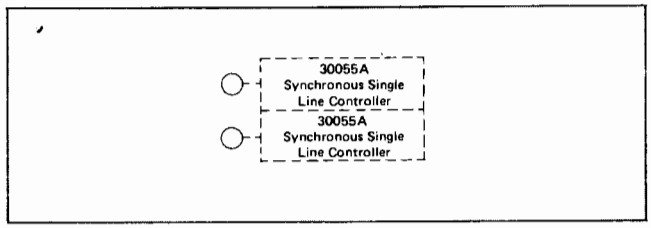

Interfacing Optional Equipment Through Interface Slots. Spare interface slots (numbered "circles" connected to the IOP Bus) are available for additional products, and can be occupied by optional equipment identified with an attached "circle."

Connecting Additional Terminals. One asynchronous terminal controller (ATC) is supplied. It permits the connection of up to 16 terminals, including the system console.

Disc Drive. One 50 Mb disc subsystem with controller is supplied, connected directly to the Central Data Bus through a selector channel. Optionally a 120 Mb disc subsystem is available. The controller can handle a total of 8 drives, 960 Mb maximum capacity.

Magnetic Tape Units. One 1600 bpi magnetic tape drive is supplied and is connected through a controller to the system. An 800 bpi drive may be selected as an alternative. The supplied controller can also handle up to three extra drives of mixed densities (up to a total of four).

Additionally, a second controller may be ordered which can also support up to four drives of mixed densities. Each additional tape drive ordered will be supplied in a cabinet attached to the system bays. See the 7970 data sheet for further configuration details on extra drives.

Line Printers. Eight options are available; the printers may be connected to any HP 3000 System.

Environmental specifications

The following specifications apply to any HP 3000 configured with any combination of the peripheral devices listed. It is not necessary to consider each device separately.

Temperature (operating)

60° – 85°F (16° – 30°C)

Relative humidity

50 - 80% non-condensing. Maximum wet bulb temperature 78°F.

Line voltage

115V +5%, -10%. (For 3-phase inputs this is the neutral-to-phase specification for each phase).
230V +5%, -10%.

Line frequency

50 or 60 Hz, ±0.5 Hz.

Maximum rate of temperature change

10°F/Hr. (5.5°C/Hr.)

HP 3000 Series II, Models 6 and 8 Configuration Guide

Hardware supplied

- Central processing unit (CPU)
- 209 firmware instructions
- System clock
- 16-port asynchronous terminal controller
- Modem support (for type 103A or equivalent)
- 16-Channel System I/O Multiplexer
- System desk
- 30030B high-speed selector channel
- 2640B CRT console with 4-kilobyte memory
- 7920 50 Mb disc with controller
- 7970E 1600 bpi magnetic tape unit with controller
- 60 Hz, 12.6 KVA Isolation transformer

Series II model 6

- 256kb fault control memory
- 10 spare I/O slots and space for 512kb memory
- Two bays, card cages, and power supplies
- Room for 31 terminals

Series II model 8

- 320kb fault control memory
- 23 spare I/O slots and space for 512kb memory
- Three bays, card cages, and power supplies
- Room for 63 terminals

Software supplied

- Multiprogramming Executive III operating system (MPE III)

HP 3000 Series Fundamental Operating Software (initial payment in system price) which includes:

- System Programming Language (SPL)
- Text editor (EDIT)
- File-copying utility (FCOPY)
- Sort and merge package (SORT)
- Compiler library

Site preparation data for Series II Model 6

	HP 7920A 50 Mb DISC DRIVE		SYSTEM BAYS		HP 2640B CRT CONSOLE AND DESK	
	USA (60 Hz)	NON-USA (50 Hz)	USA (60 Hz)	NON-USA (50 Hz)	USA (60 Hz)	NON-USA (50 Hz)
VOLTAGE	115	230	208 phase/phase	230	115	230
PHASES	1	1	3	1	1	1
CURRENT PER PHASE	4.5A	2.3A	*	* 12A	1.3	0.7
HEAT OUTPUT (per hour)	2200 btu	554 kcal	14,000 btu	3500 kcal	483 btu	129 kcal
WEIGHT	240 lb	109 kg	790 lb	358 kg	139 lb	64 kg
SIGNAL CABLE LENGTH	**	**	–	–	25 ft	7.6 m

Site preparation data for Series II Model 8

	HP 7920A 50 Mb DISC DRIVE		SYSTEM BAYS		HP 2640B CRT CONSOLE AND DESK	
	USA (60 Hz)	NON-USA (50 Hz)	USA (60 Hz)	NON-USA (50 Hz)	USA (60 Hz)	NON-USA (50 Hz)
VOLTAGE	115	230	208 phase/phase	230	115	230
PHASES	1	1	3	1	1	1
CURRENT PER PHASE	6A	3A	*	* 15.5A	1.3	0.7
HEAT OUTPUT (per hour)	2200 btu	554 kcal	15,000 btu	3881 kcal	483 btu	129 kcal
WEIGHT	240 lb	109 kg	1010 lb	458 kg	139 lb	64 kg
SIGNAL CABLE LENGTH	**	**	–	–	25 ft	7.6 m

* *Plan for 300% overcurrent turn-on surge.*

** *Up to eight disc drives may be daisy-chained to a controller. The cable length from the controller to the first drive is 18 ft. (5.5 M). The cable length between disc drives is 8 ft. (2.4 m).*

In addition, each drive also has a cable back to the controller. The length of this cable for each drive is 50 ft. (15.2 m).

The maximum cumulative length of daisy-chained cable is 74 ft. (22.5 m). Longer cables may be special ordered, but this is not advised.

Maximum configuration diagram, model 6

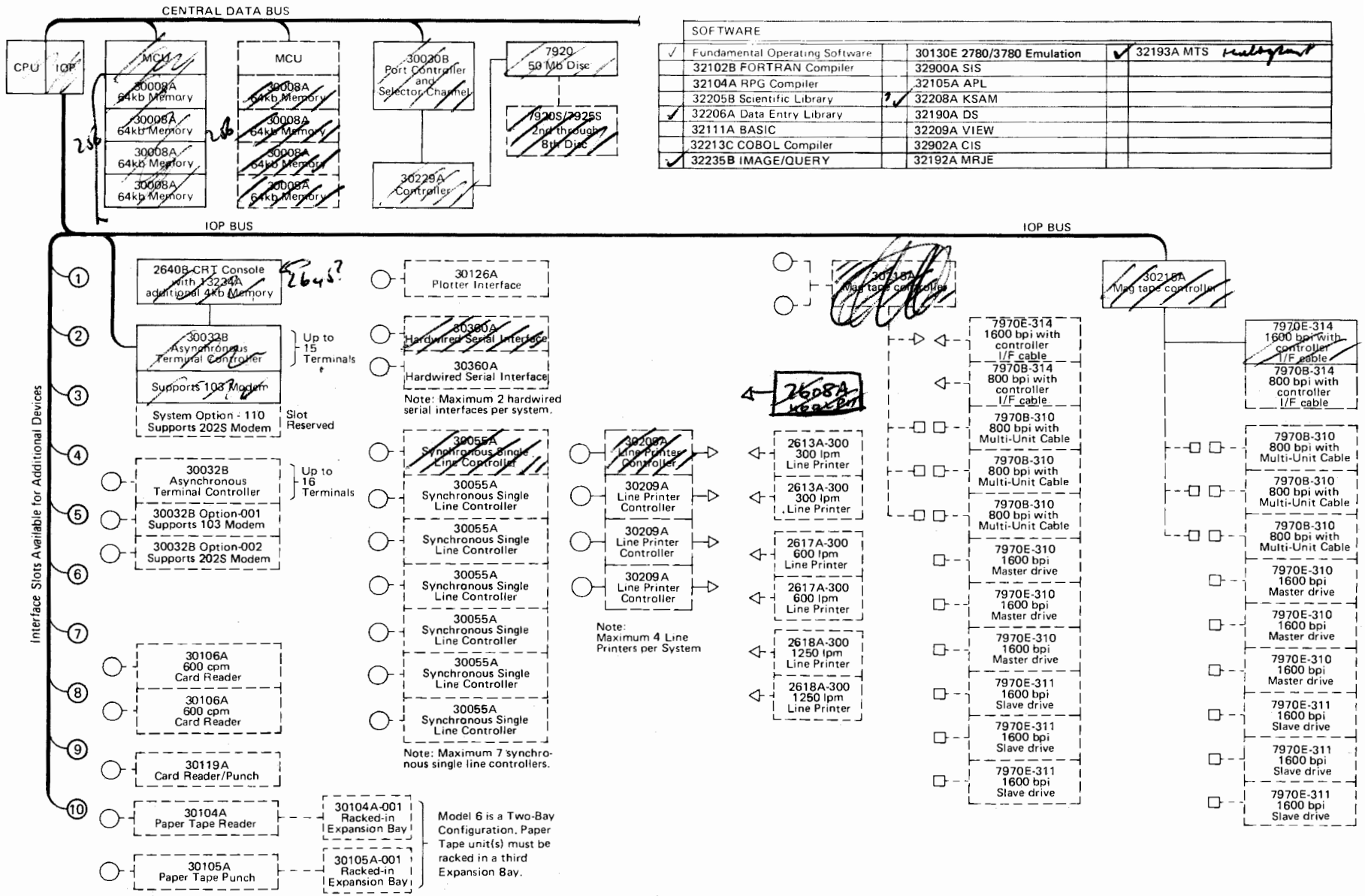

	SOFTWARE				
✓	Fundamental Operating Software		30130E 2780/3780 Emulation	✓	32193A MTS
	32102B FORTRAN Compiler		32900A SIS		
	32104A RPG Compiler		32105A APL		
	32205B Scientific Library		32208A KSAM		
✓	32206A Data Entry Library		32190A DS		
	32111A BASIC		32209A VIEW		
	32213C COBOL Compiler		32902A CIS		
✓	32235B IMAGE/QUERY		32192A MRJE		

Maximum configuration diagram for model 8

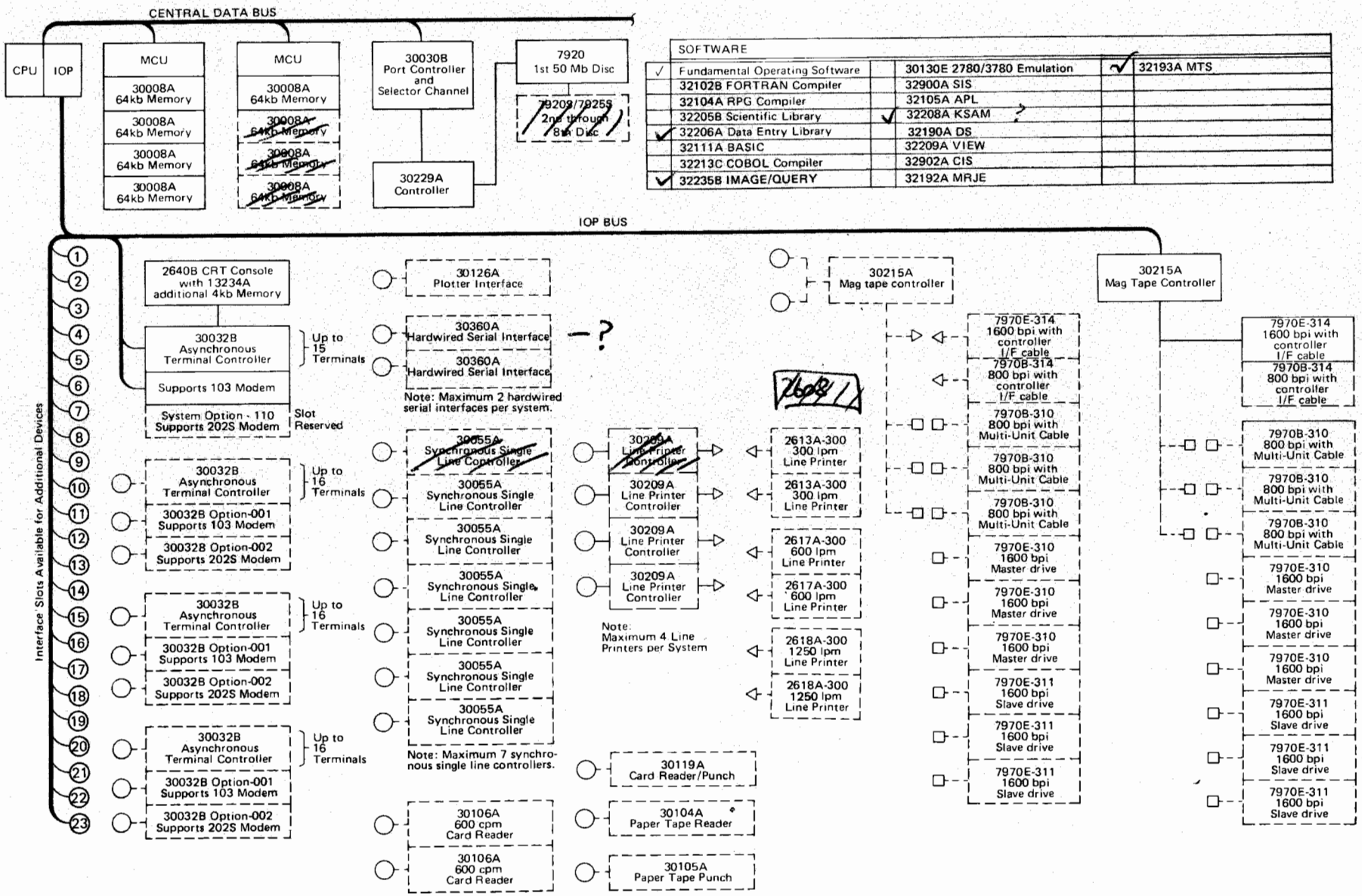

HP 3000 Series III Configuration Guide

Hardware supplied

- Central processing unit (CPU)
- 209 firmware instructions
- System clock
- 16-port asynchronous terminal controller
- Modem support (for type 103 or equivalent)
- 16-Channel System I/O Multiplexer
- System desk
- 30030C high-speed selector channel
- 2640B CRT console with 4-kilobyte memory
- 7920 50 Mb disc with controller
- 7970E 1600 bpi magnetic tape unit with controller
- 60 Hz, 12.6 KVA isolation transformer
- 256kb fault control memory
- 10 spare I/O slots and space for 2048kb memory
- Two bays, card cages, and power supplies
- Room for 31 terminals plus system console

Software supplied

- Multiprogramming Executive III operating system (MPE III)

HP 3000 Series Fundamental Operating Software (initial payment in system price) which includes:

- System Programming Language (SPL)
- Text editor (EDIT)
- File-copying utility (FCOPY)
- Sort and merge package (SORT)
- Compiler library

Site preparation data for standard Series III

	HP 7920A 50 Mb DISC DRIVE		SYSTEM BAYS		HP 2640B CRT CONSOLE AND DESK	
	USA (60 Hz)	NON-USA (50 Hz)	USA (60 Hz)	NON-USA (50 Hz)	USA (60 Hz)	NON-USA (50 Hz)
VOLTAGE	115	230	208 phase/phase	230	115	230
PHASES	1	1	3	1	1	1
CURRENT PER PHASE	4.5A	2.3 A	*	* 12A	1.3	0.7
HEAT OUTPUT (per hour)	2200 btu	554 kcal	14,000 btu	3500 kcal	483 btu	129 kcal
WEIGHT	240 lb	109 kg	790 lb	358 kg	139 lb	64 kg
SIGNAL CABLE LENGTH	**	**	–	–	25 ft	7.6 m

Site preparation data for Series III with option 200 (I/O expansion to third bay)

	HP 7920A 50 Mb DISC DRIVE		SYSTEM BAYS		HP 2640B CRT CONSOLE AND DESK	
	USA (60 Hz)	NON-USA (50 Hz)	USA (60 Hz)	NON-USA (50 Hz)	USA (60 Hz)	NON-USA (50 Hz)
VOLTAGE	115	230	208 phase/phase	230	115	230
PHASES	1	1	3	1	1	1
CURRENT PER PHASE	6A	3A	*	* 15.5A	1.3	0.7
HEAT OUTPUT (per hour)	2200 btu	554 kcal	15,000 btu	3881 kcal	483 btu	129 kcal
WEIGHT	240 lb	109 kg	1010 lb	458 kg	139 lb	64 kg
SIGNAL CABLE LENGTH	**	**	–	–	25 ft	7.6 m

* *Plan for 300% overcurrent turn-on surge.*

** *Up to eight disc drives may be daisy-chained to a controller. The cable length from the controller to the first drive is 18 ft. (5.5 M). The cable length between disc drives is 8 ft. (2.4 m).*

In addition, each drive also has a cable back to the controller. The length of this cable for each drive is 50 ft. (15.2 m).

The maximum cumulative length of daisy-chained cable is 74 ft. (22.5 m). Longer cables may be special ordered, but this is not advised.

Maximum configuration diagram for Series III

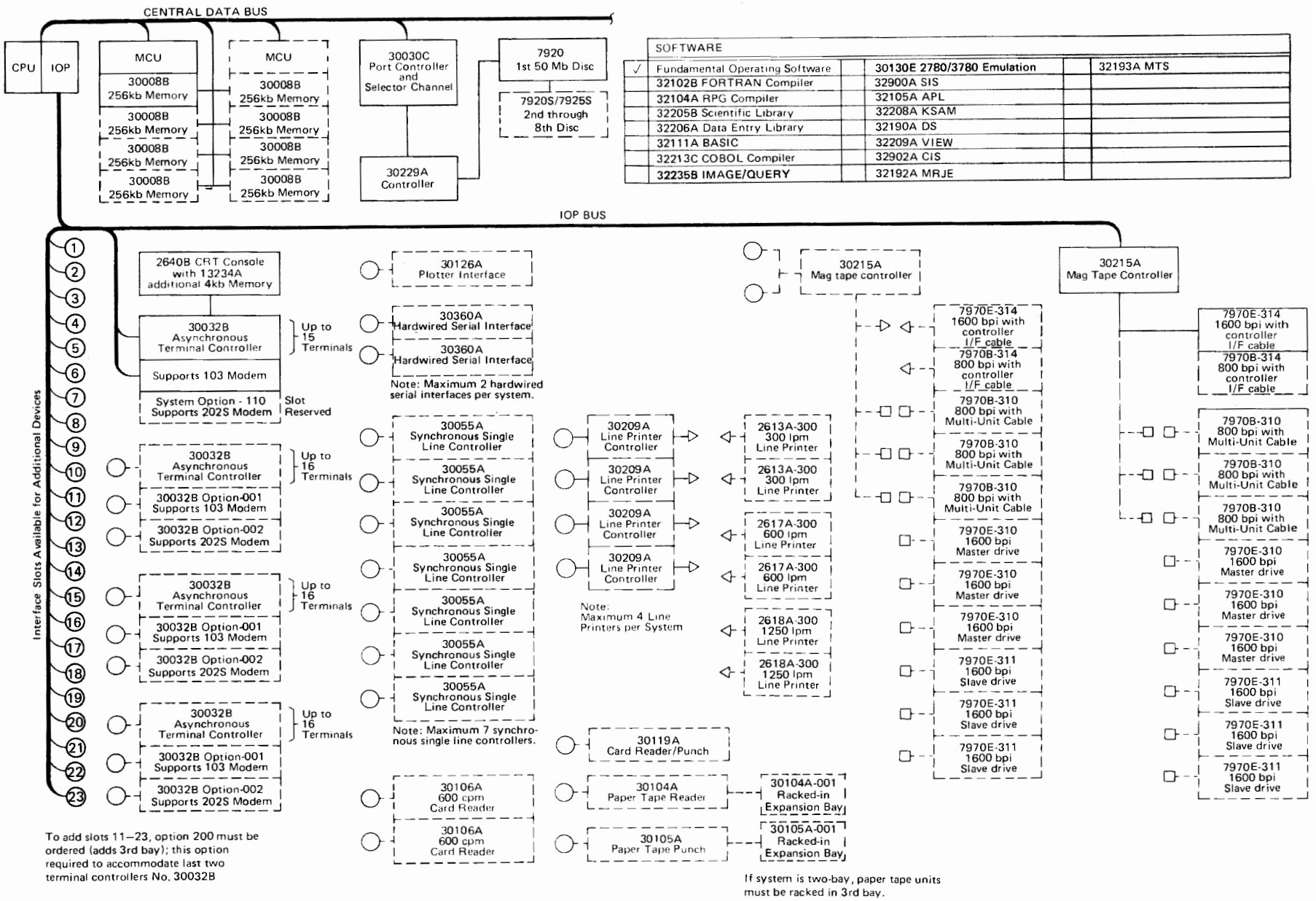

HEWLETT hp PACKARD

HP 3000 Series II Model 6 Memory Expansion Upgrade

model 30411B

The 30411B memory expansion upgrade kit allows you to expand the memory capacity of HP 3000 Series II Model 6 systems beyond 256k bytes to a maximum of 512k bytes. Designed for Model 6 systems with memory of 128k, 192k, 256k bytes, the upgrade kit increases memory by 64k bytes. The number of I/O slots remains unchanged. As illustrated in the table below, further memory expansion (up to the 512kb limit) can be accomplished by simply adding the necessary 30008A 64k byte memory array boards. These boards can be purchased with the upgrade kit, if desired.

Present System	Number of 30008A 64k byte memory boards required after addition of 30411B to expand memory to			
	320kb	384kb	448kb	512kb
256k byte Model 6	0	+1	+2	+3

The configuration of the upgraded system is outlined in the Model 6 configuration diagram.

Software

One 64kb memory board, memory power supply, fault control memory array, memory controller, cables, and mounting hardware.

Hardware supplied

One 64kb memory board, memory power supply, fault control memory array, memory controller, cables, and mounting hardware.

Warranty

The new hardware components furnished with the kit are warranted for 90 days from the date of installation. This warranty is implemented as a free service contract on the new equipment only.

System requirements

HP 3000 Series II Model 6 with memory of 256kb.

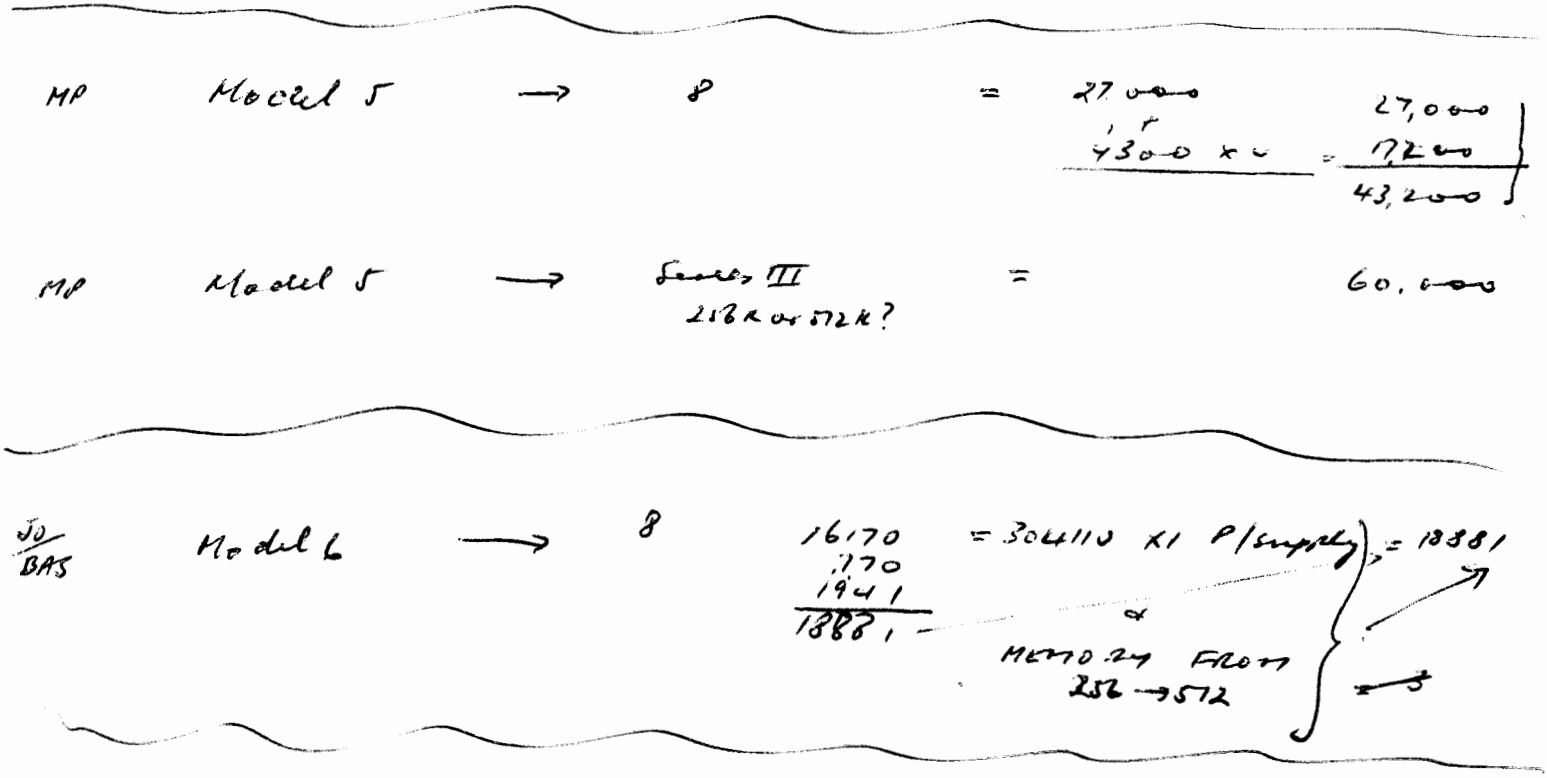

HEWLETT PACKARD

HP3000 Series II Model 8 Upgrade

model 30408A

The 30408A upgrade kit is designed for use with HP 3000 Series II, Models 5, 6, and 7 to allow memory expansion beyond 256k to a maximum of 512k bytes, or expand the number of available I/O slots.

The upgrade kit consists of a single cabinet that is installed to the left of the existing CPU bay. It contains power supplies, two card cages, cabling, and 64k bytes of memory.

I/O slots

By installing the 30408A, the number of available I/O slots is increased as follows:

Model	From	To
5	15	23
6	10	23
7	13	23

(see Model 8 configuration diagram for constraints of upgraded system.)

Memory

Assuming the initial system has 256k bytes of memory, after upgrading, the system will have a memory of 320k bytes, plus expansion capability up to 512k bytes simply by adding the necessary memory array boards. These can be purchased with the upgrade kit if desired. For Model 6 systems which have already increased the memory capacity to 320kb or greater, option 002 is available to increase *only* the I/O capacity.

Note: Order additional 30008A 64kb memory modules to increase memory to the desired capacity.

Software

No software products are included with the upgrade kit. All software used with the previous system will operate with the upgraded system without modification.

Warranty

The new hardware components furnished with the kit are warranted for 90 days from date of installation. This warranty is implemented as a free service contract on the new equipment only.

System requirements

HP 3000 Series II, Model 5, 6, or 7.

Equipment supplied

I/O cabinet, memory expansion kit with power supply, 64k byte fault control memory board, I/O power supply, two card cages, and cabling.

HEWLETT hp PACKARD

HP 3000 Series II to Series III Upgrade

model 30417A

The 30417A kit is designed to upgrade an HP 3000 Series II system to a Series III with 512kb of memory. A 512kb MOS memory is included with the kit. Expansion to 2048kb is possible with the addition of a 30418A Series III memory expansion kit and 30008B memory array boards. Return of the Series II CPU, selector, multiplexer, backplane, 30008A memory array boards, and associated memory control hardware is required.

System prerequisites

The minimum system required is an HP 3000 Series II.

Software

MPE III operating system is required to support over 512kb of memory.

Configuration, environment, power

All configuration, environmental, and power requirements remain unchanged from the original Series II model which was upgraded. To add more peripherals to your upgraded Series II, refer to original configuration information (see Model 6 and 8 configuration diagrams).

Warranty

The new hardware components furnished with the kit are warranted for 90 days from the date of installation. This warranty is implemented as a free service contract on new equipment only.

Computer Museum

Cool?

HEWLETT hp PACKARD

HP 3000 Series III Memory Expansion

model 30418A

The 30418A memory expansion upgrade permits increasing memory capacity of HP 3000 Series III systems from 1024kb to a maximum of 2048kb. The kit includes two 256kb memory boards with built-in fault control memory, controller, cables, and mounting hardware. Further expansion to the full 2048kb is accomplished by adding two more optional 256kb memory array boards.

System prerequisites

HP 3000 Series III with memory of 1024kb. For Series II Models 5 and 7 which have been upgraded to a Series III, 30408A option 002 is required.

Configuration, environment, power

All configuration, environmental, and power requirements remain unchanged from the original Series II model which was upgraded. To further expand your upgraded Series II, refer to original configuration information (see Model 6 and 8 configuration diagrams).

Warranty

The new hardware components furnished with the kit are warranted for 90 days from the date of installation. This warranty is implemented as a free service contract on new equipment only.

Products Supported on HP 3000 Systems

Add-on products are supported on the Series 33 and Series II and III as shown in the chart. The support of peripherals is subject to change, however, with new releases of the MPE operating system.

Model No.	Description	Series 33	Series II and III
SOFTWARE SUBSYSTEMS			
32205B	Scientific Library	X	X
32213C	COBOL/3000 Compiler	X	X
32104A	RPG/3000 Compiler	X	X
32102B	FORTRAN/3000 Compiler	X	X
32111A	BASIC/3000 Interpreter & Compiler	X	X
32105A	APL\3000 Language Subsystem		X
32206A	DEL/3000 Date Entry Library	X	X
32209A	VIEW/3000	X	X
32235B	IMAGE and QUERY/3000 Data Base Management Subsystem	X	X
32208A	KSAM/3000 Keyed Sequential Access Method	X	X
30130E	RJE/3000 2780/3780 Emulation		X
32192A	MRJE/3000 Multileaving Remote Job Entry		X
32193A	MTS/3000 Multipoint Terminal Support		X
32190A	DS/3000 Distributed Systems Software		X
32900A	SIS/3000 School Information System		X
32902A	CIS/3000 College Information System		X
HARDWARE AND PERIPHERALS			
30032B	Asynchronous Terminal Controller		X
30018A,	Asynchronous Data Communications	X	
30019A	Controller – Main and Extender	X	
30037A	Asynchronous Repeater		X
30055A	Synchronous Single Line Controller		X
30360A	Hardwired Serial Interface		X
30079A	General I/O Channel	X	
7906S	20 Megabyte Cartridge Disc Drive	X	
7920S	50 Megabyte Disc Drive	X	
7925S	120 Megabyte Disc Drive	X	X
2640X	Interactive Display Terminal		X
2641A	APL Display Station		X
2645X	Interactive Display Station	X	X
2647A	Intelligent Graphics Terminal	X	X
2648A	Graphics Terminal	X	X
2635A	Printing Terminal	X	X
2631A	Dot Matrix Character Printer	X	X
7970B	800 bpi Digital Magnetic Tape Drive		
7970E	1600 bpi Digital Magnetic Tape Drive	X	X
2613A	Low Speed Line Printer		X
2608A	Dot Matrix Line Printer	X	X
2617A	Medium Speed Line Printer		
2618A	High Speed Line Printer		X
30106A	Card Reader Subsystem		X
30119A	Card Reader Punch Subsystem		X
30105A	Tape Punch Subsystem		X
30104A	Punched Tape Reader Subsystem		X
30126A	CalComp Plotter Interface Subsystem		X
			X

Support for foreign device users – There may be occasions when it is desired to interface a non-Hewlett-Packard product to an HP 3000. Support for the foreign device and system modifications required to drive it are the responsibility of the customer. If the HP 3000 exhibits problems resulting from the foreign device, the system must be reconfigured to its original Hewlett-Packard configuration and with the current supported version of the operating system before service can be rendered under the Customer Maintenance Agreement. Hewlett-Packard will not warrant compatibility of operating systems, user subsystems, or modifications to Hewlett-Packard hardware necessitated by design updates with any non-Hewlett-Packard product to an HP 3000.

HEWLETT hp PACKARD

HP 3000 Software Support

As detailed below, Hewlett-Packard offers a comprehensive set of support services to assist the customer in effectively managing his system software. This support is provided to the customer's designated System Manager or his alternate.

Features of Hewlett-Packard's support include:

- A long-term vendor commitment to high-quality support
- A comprehensive, well-defined set of support services
- The choice of a monthly or a prepaid right-to-use plan
- Flexible support arrangements for multiple HP 3000 installations
- Lower prices for volume purchases

Two levels of software support services are available:

1. Comprehensive Software Support
2. Software Subscription Services.

Comprehensive software support

This level includes phone-in consulting and on-site software services, plus all the services under the Software Subscription Service Plan.

Telephone Assistance: The System Manager will receive telephone numbers for the nearest Phone-In Consulting Service office to assure contact with an HP Systems Engineer to discuss questions and provide advice to resolve any software-related problems. This service is available from 8:30 a.m. to 5 p.m., local time, typically with a four-hour response. Hewlett Packard will assist in identifying, verifying, reporting, and resolving problems which have been isolated by the System Manager. The System Manager may request on-site software assistance by an HP Systems Engineer for the following two classes of problems: 1) Problems that can not be isolated by a telephone conversation, and 2) Problems of a critical nature.

On-Site Software Service: Hewlett-Packard will provide on-site software services for customer's facilities located within a 100-mile radius of HP Computer Systems service facilities. On-site services are available during the hours of 8:30 a.m. to 5 p.m., local time at the HP facility, Monday through Friday, exclusive of HP holidays.

An HP Systems Engineer will normally arrive within eight working hours of the telephone request by the System Manager. As in Telephone Assistance, HP will aid the System Manager in identifying, verifying, isolating, reporting, and resolving problems associated with the HP software product.

If the problem reported is not associated with an HP software design error or system malfunction, the on-site services are considered outside the scope of Hewlett-Packard's software and support agreement and subject to a time and materials charge.

HP is not obligated to provide any on-site services for HP software products which have been modified by the customer or copied without authorization.

Software subscription service

Software Subscription service is intended to provide a customer with documentation updating, software updating, and a vehicle to request software maintenance or enhancements (system engineering service is not included with this plan). *Note: The services below are also a part of the Comprehensive Software Support plan.*

Software Communication: A publication called the "HP 3000 Communicator" will be sent periodically to your System Manager. This publication contains operational tips, programming techniques, available HP documentation, and articles of general interest to HP 3000 users.

Software Problem Documentation: The System Manager will receive "Software Status Bulletins" twice each month. These bulletins will include information regarding software enhancements, current software design errors, and interim programming solutions.

Reference Manual Updates: The System Manager will receive the appropriate software reference manual updates and revisions as HP makes them available.

Software Updates and Enhancements: As software enhancements are made or permanent solutions are developed for known problems, they will be incorporated into an installation tape to be released every three months. A Hewlett-Packard Customer Engineer will install this latest revision of the appropriate software shortly after release (normally at preventive maintenance time).

HP 3000 Software payment plans

Plan #1 gives the customer the right to use HP software for a low initial payment and monthly fee for 48 months. After initial payment and 48 monthly fee payments, the customer has the right to use HP software for an unlimited period.

Plan #2 is a one-time payment plan which offers 12 months of Comprehensive Software Support and an immediate right to use HP software on one system for an unlimited period at a single prepaid price.

Both plans include a copy of the software object code, installation of the software, a 90-day warranty period, software documentation, and 12 months (plan #2) or 48 months (plan #1) of Comprehensive Software Support.

At the expiration of plan #1 or #2, the customer may elect to continue purchasing Comprehensive Support or switch to Software Subscription Support only.

HP 3000 SOFTWARE PRICE SUMMARY

Product No.	Product	Monthly Plan #1		Prepaid Plan #2	Software Subscription Service
		Initial Fee	Monthly Fee (For 48 Mos)		
32416A	X Fund. Oper. Software	3750 + 5%	125		35
32418A	X (FCOPY, EDIT, SORT				
32421A	X SPL, Comp. Lib.)				
	Languages				
32213C	X COBOL	1500 + 5%	105		30
32104A	X RPG				30
32111A	X BASIC	1500 + 5%	50		15
32102B	X FORTRAN				15
32105A	X APL\3000				40
	Data Entry				
	Data Management				
32208A	X KSAM	1500 + 5%	25		10 X
32235B	X DBMS (Image & Query)	3000 + 5%	125		40 X
32206A	X DEL	500 + 5%	50		15 X
32209A	VIEW	1500 + 5%	75		25 X
	Communications				
32190A	DS/3000				
30130E	RJE/3000				
32192A	MRJE/3000				
32193A	MTS/3000	1000 + 5%	50		15
	Miscellaneous				
32205B	SCIENTIFIC LIBRARY				
32900A	SIS				
32902A	CIS				

SOFTWARE ORDERING GUIDE

Ordering Information:

With Plan #1, an order consists of (A) one quantity of the software product and (B) 48 quantities of the monthly fee. With Plan #2, an order consists of (A) one quantity of the software product, (B) one quantity of the software product option 002, and (C) 12 quantities of the monthly fee.

	Software Payment Plan per Product	Product Quantities		
		Initial Payment (Product Number)	Prepayment (Product Number Option 002)	Monthly Fee (22823A Option)
Plan #1	Monthly Plan (initial and monthly fees)	one	none	48
Plan #2	Prepaid (initial fee, option 002, and monthly fees)	one	one	12

Initial Payment Prices

PRODUCT NUMBER	DESCRIPTION	PRICE
Included with System Number	Fundamental Operating Software (SPL, FCOPY, SORT, EDIT, Compiler Library).	Included in System Price
	Languages	
32102B	FORTRAN	
32104A	RPG	
32105A	APL	
32111A	BASIC	
32213C	COBOL	
	Data Management	
32206A	DEL	
32208A	KSAM	
32209A	VIEW	
32235B	DBMS (Image & Query)	
	Communications	
30130E	RJE/3000	
32190A	DS/3000	
32192A	MRJE/3000	
32193A	MTS/3000	
	Miscellaneous	
32900A	SIS	
32902A	CIS	
32205B	Scientific Library	

Monthly Fees

PRODUCT NUMBER	DESCRIPTION	FEE
22823A	Product Number for FOS. Required for all systems. Add options for software you will use.	
	Languages	
22823A-001	APL\3000	
22823A-002	BASIC	
22823A-003	COBOL	
22823A-007	FORTRAN	
22823A-011	RPG	
	Data Management	
22823A-004	DEL	
22823A-008	DBMS (Image & Query)	
22823A-010	KSAM	
22823A-020	VIEW	
	Communications	
23823A-005	DS/3000	
23823A-006	RJE/3000	
23823A-015	MRJE/3000	
23823A-019	MTS/3000	
	Miscellaneous	
22823A-012	Scientific Library	
22823A-013	SIS	
22823A-014	CIS	

Prepayment Options

PRODUCT NUMBER	DESCRIPTION	PRODUCT OPTION 002 PRICE
32412A-002	FOS (Series 33, 60 Hz)	
32413A-002	FOS (Series 33, 50 Hz)	
32416A-002	FOS (Series II Mod 6)	
32418A-002	FOS (Series II Mod 8)	
32421A-002	FOS (Series III)	
	Languages	
32102B-002	FORTRAN	
32104A-002	RPG	
32105A-002	APL\3000	
32111A-002	BASIC	
32213C-002	COBOL	
	Data Management	
32206A-002	DEL	
32208A-002	KSAM	
32209A-002	VIEW	
32235B-002	DBMS (Image & Query)	

PRODUCT NUMBER	DESCRIPTION	PRODUCT OPTION 002 PRICE
	Communications	
30130E-002	RJE/3000	
32190A-002	DS/3000	
32192A-002	MRJE/3000	
32193A-002	MTS/3000	
	Miscellaneous	
32205B-002	Scientific Library	
32900A-002	SIS	
32902A-002	CIS	

PRODUCT NUMBER	OPTION	DESCRIPTION	PRICE	MONTHLY MAINT. CHARGE
		HP 3000 Series 33 System		
32412A (US version)		**HP 3000 Series 33 Computer System:** 200/240V, 60 Hz, single phase; 256kb memory; 20 Mb 7906 disc; 1 Mb 7902 flexible disc; HP 3000 System console/maintenance console; 8 port asynchronous data communications controller; 103 and 202S modem capability; 2 general I/O channels; remote diagnostic capability; system desk mainframe. MPE III operating system. Initial payment for Fundamental Operating Software (SPL; EDIT; FCOPY; SORT; Compiler Library) 48 additional monthly software fee payments required. Complete user manual set.		
	002	Prepaid purchase option of HP 3000 Fundamental Operating Software (SPL; EDIT; FCOPY; SORT; Compiler Library)		
	120	Replace 20 Mb 7906 disc with 50 Mb 7920 disc.		
	125	Replace 20 Mb 7906 disc with 120 Mb 7925 disc.		
32413A (Inter-national version)		**HP 3000 Series 33 Computer System:** 200/240V, 50 Hz, single phase; 256kb memory; 20 Mb 7906 disc; 1 Mb 7902 flexible disc; HP 3000 System console/maintenance console; 8 port asynchronous data communications controller; 103 and 202S modem capability; 2 general I/O channels; remote diagnostic capability; system desk mainframe. MPE III operating system. Initial payment for Fundamental Operating Software (SPL; EDIT; FCOPY; SORT; Compiler Library) 48 additional monthly software fee payments required. Complete user manual set.	58500 +5%(410)	
	002	Prepaid purchase option of HP 3000 Fundamental Operating Software (SPL; EDIT; FCOPY; SORT; Compiler Library)		
	120	Replace 20 Mb 7906 disc with 50 Mb 7920 disc. Tape Drive HPIB	3000	~~23~~
	125	Replace 20 Mb 7906 disc with 120 Mb 7925 disc.		
		Memory and I/O Expansion (for Series 33)		
30416A		**HP 3000 Series 33 Expansion Kit.** Includes second card cage, cooling unit, and power supply. Provides 7 additional I/O slots.		
30078A		**128kb Fault Control 16K RAM Semiconductor Memory Array.** Order 128kb arrays so that resulting system is 512kb, 768kb, or 1024kb.		
30018A		**Asynchronous Data Communications Controller (ADCC)** – Main (4 terminal ports). Includes 103 type modem support and 2400 baud communications.		
30019A		**Asynchronous Data Communications Controller (ADCC)** – Extender (4 terminal ports). Includes 202S type modem support for ADCC-M and ADCC-E. Order ADCC Extender before second ADCC Main.		
30079A		**General I/O Channel (GIC).** Order to support magnetic tape drives on system.	1800	+10
		Disc Memories (for Series 33)		
7906S		**19.6 Mb Add-on Disc Drive.** For use as second through eighth add-on drive. Includes 7906, cartridge, low-profile cabinet, and cables (multi-unit 8 ft and data cable 50 ft).		
	015	230V/50 Hz single phase operation. Specify destination country for correct power cord.		
7920S		**50 Mb Add-on Disc Drive.** For use as second through eighth add-on drive. Includes 7920, 13394A disc pack, cabinet, and cables (multi-unit 8 ft and data cable 50 ft).		
	015	230V/50 Hz single phase operation. Specify destination country for correct power cord.		

PRODUCT NUMBER	OPTION	DESCRIPTION	PRICE	MONTHLY MAINT. CHARGE
7925S		**120 Mb Add-on Disc Drive.** For use as second through eighth add-on drive. Includes 7925, 13356A disc pack, cabinet and cables (multi-unit 8 ft and data cable 50 ft).		
	015	230V/50 Hz single phase operation. Specify destination country for correct power cord.		
12940A		**7906 Disc Cartridge**		
13394A		**7920 Disc Pack**		
13356A		**7925 Disc Pack**		
		Magnetic Tape Drives (for Series 33)		
7970E		**1600 bpi, 45 ips Mag Tape Drive.** Must order option 426 for master or 421 for slave drive. 9 track phase encoded, 115V/230V switch; 48-66 Hz. Power cord supplied	8885	70
	426	Specifies HP-IB Master drive. Includes lowboy cabinet and HP-IB integrated controller. HP-IB data cable not included.	3115	23
	421	Specifies HP-IB Slave drive. Includes lowboy cabinet and multi-unit cable (20 ft).		
		Line Printers (for Series 33)		
2631A		**180 cps Dot Matrix Printer.** Must order option 333. Pedestal stand not included.		
	015	220V, 48-62 Hz		
	333	Series 33 option with HP-IB interface		
		Additional Products		
26097A		**Pedestal Stand for 2631A**	3375	31
	001	Add casters		
	002	Add paper catcher		
		02631-60060 ribbon cartridge — qty 1 qty 6 qty 12		
		Note: Print head is included in Monthly Maintenance Charge.		
2608A		**400 lpm Dot Matrix Printer.** Must order option 333. 128 character USASCII set. Includes enclosed stand with casters, paper basket. Monthly maintenance charge allows three levels of monthly usage. Level 1: 1-69 print hours Level 2: 70-129 print hours Level 3: 130-360 print hours	9270 + 5% = 9733	147
	015	220V, 48-62 Hz		
	110	Add sound cover	11.600	
	333	Series 33 option with HP-IB interface		
		HP-IB Cables (for Series 33)		
31389A		**HP-IB Cable.** 1M (3 ft)		
31389B		**HP-IB Cable.** 2M (7 ft)		
31389C		**HP-IB Cable.** 4M (13 ft)		

For information on interactive display terminals and printing terminals, refer to the appropriate section in this price list.

Series 33 Peripheral Cables

Discs

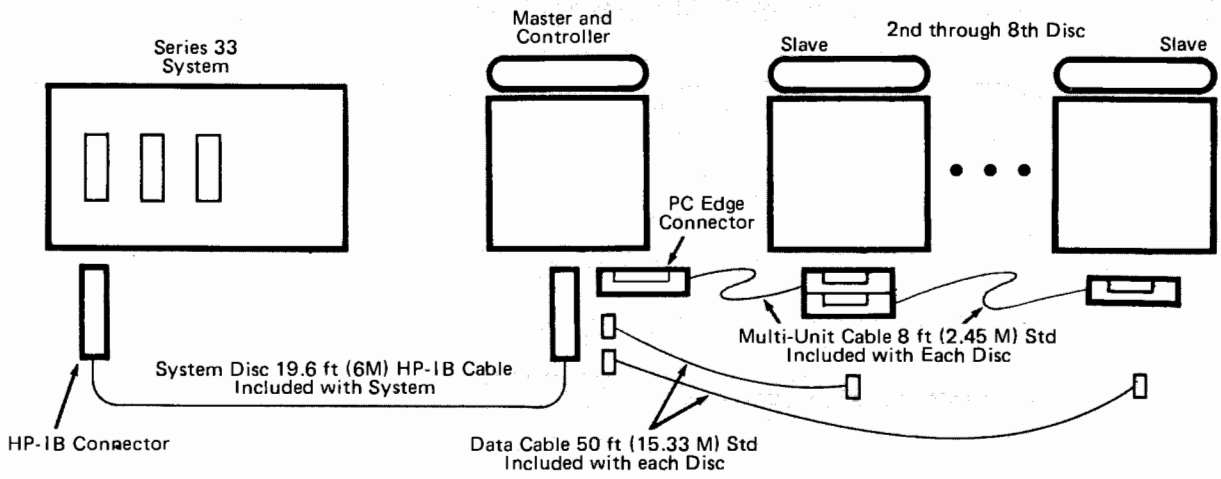

Printers

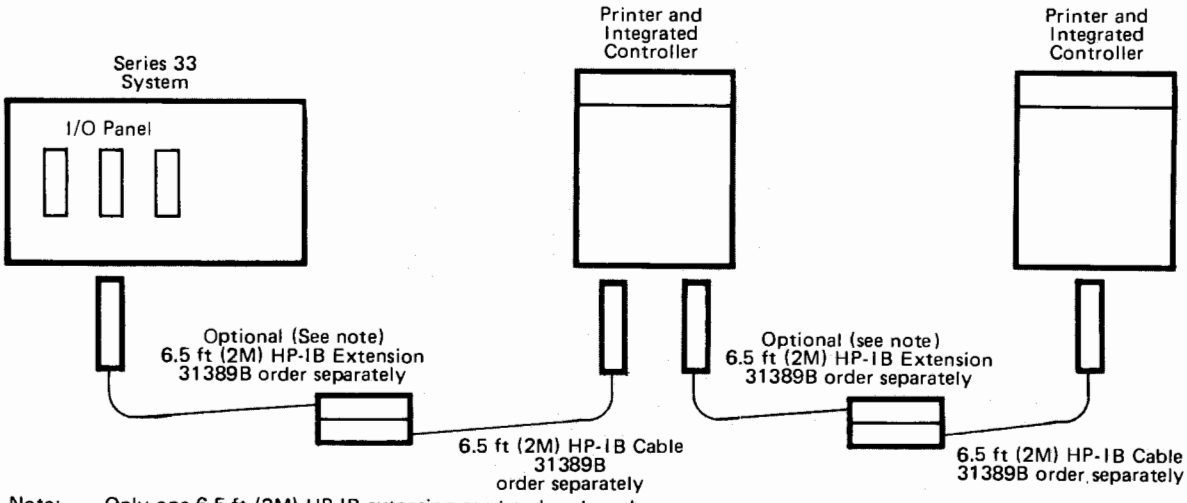

Note: Only one 6.5 ft (2M) HP-IB extension can be placed on the line printer link. Choose only one of the optional cables. Total HP-IB cable length is thus 19.6 ft (6M).

Magnetic tapes

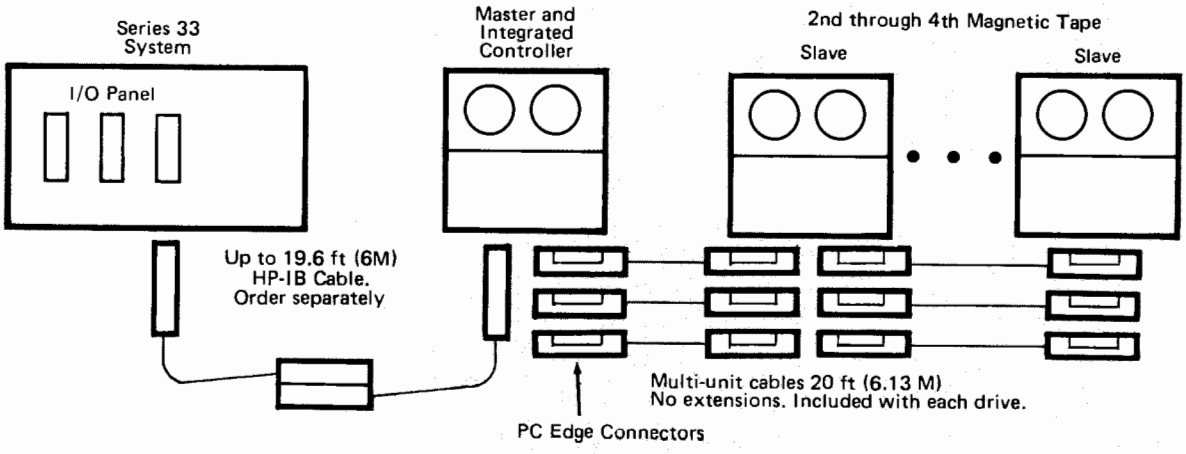

PRODUCT NUMBER	OPTION	DESCRIPTION	PRICE	MONTHLY MAINT. CHARGE
		HP 3000 Series II Systems		
32416A		**HP 3000 Series II Model 6 Computer System.** 120/208V, 60 Hz, 3-phase; 256kb memory, 50 Mb disc, 1600 bpi mag tape, 2640B console, 16 port asynchronous terminal controller, 103 modem capabilities, 2 system cabinets, table and MPE III operating system. Initial payment for Fundamental Operating Software (SPL, EDIT, FCOPY, SORT, Compiler Library) — 48 additional monthly software fee payments required. Complete manual set.	79.000	664.00
	002	Pre-paid purchase option of Fundamental Operating Software		
	015	230V, 50 Hz single-phase operation. Isolation transformer not supplied.	-2100	
	050	Deletes isolation transformer.		
	110	Adds 202S type modem control to asynchronous terminal controller	1240	6.00
	125	[illegible]		
	130	Replaces 1600 bpi mag tape unit with 800 bpi mag tape unit		
	135	[illegible]		
	502	Expands memory to 320kb		
	503	Expands memory to 384kb		
	504	Expands memory to 448kb		
	505	[illegible]	18700	141
32418A		**HP 3000 Series II Model 8 Computer System.** 120/208V, 60 Hz, 3-phase; 320kb memory, 50 Mb disc, 1600 bpi mag tape, 2640B console, 16 port asynchronous terminal controller, 103 modem capability, 3 system cabinets and table, and MPE III operating system. Initial payment for Fundamental Operating Software (SPL, EDIT, FCOPY, SORT, Compiler Library) — 48 additional monthly software fee payment required. Complete manual set.	121600	765
	002	Pre-paid purchase option of Fundamental Operating Software	-2400	
	015	230V, 50 Hz single-phase operation. Isolation transformer not supplied.	+1800	
	050	Deletes isolation transformer.		
	110	Adds 202S type modem control to asynchronous terminal controller	1240	6
	125	Replaces 7920 (50 Mb disc) with 7925 (120 Mb disc)		
	130	Replaces 1600 bpi mag tape unit with 800 bpi mag tape unit		
	135	Replaces 2640B system console with 2635A system console		
	503	Expands memory to 384kb		
	504	Expands memory to 448kb		
	505	Expands memory to 512kb	11100 -4000 7100	63
		Field-Installed HP 3000 Series II Memory Expansion		
30008A		**64kb Memory Module**	2800	
		Note: Models 5 and 7 memory expandable to 256kb; Models 6, 8 and 9 memory expandable to 512kb.		
30411A		**Field-installed Memory Expansion Subsystem for Models 8 and 9.** Expands memory from 256kb to 320kb.		
		Note: Required for customers who have upgraded from an HP 3000CX to Series II and wish to expand memory from 256kb to 320kb.		
30411B		**Memory Expansion Kit for Series II Model 6.** Allows Model 6 to accommodate up to 512kb of memory. Includes one 64kb memory board.		

PRODUCT NUMBER	OPTION	DESCRIPTION	PRICE	MONTHLY MAINT. CHARGE
		HP 3000 Series II I/O Expansion Products		
30030B		**High Speed Selector Channel.** For Series II Systems.		
		Note: 30030B may be used only with 30229A disc controller.		
30032B		**Asynchronous Terminal Controller.** Adds 16 asynchronous terminal ports.		
	001	For 103 type modems only		
	002	For 103 and 202S type modems		
30441A		**Asynchronous Terminal Controller Field Upgrade Kit.** This kit allows conversion of a standard 30032B to a 30032B-001. The same kit converts a 30032B-001 to a 30032B-002. Ordering of two kits converts a standard 30032B to a 30032B-002.		
30408A		**HP 3000 Series II Model 8 Upgrade.** From Models 5, 6, or 7. Converts these models to a system similar to a Series II Model 8. Includes memory expansion kit to accommodate up to 512kb of memory, additional cabinet for I/O expansion of 13 I/O slots plus space for 32 additional terminal ports (has one 64kb memory array board).		
		Note: To obtain desired memory size, order additional 30008A 64kb memory modules.		
	001	Adds both memory expansion and I/O expansion kits. Required for Model 6 with 256kb or less.		
	002	Deletes memory expansion kit and 64kb memory array board. Adds I/O expansion only. Required for Model 6 systems with 320kb or greater.		
		HP 3000 Series III Upgrade (from Series II system)		
30417A		**HP 3000 Series III Upgrade.** Converts any HP 3000 Series II to a Series III with 512kb of MOS memory. System may ultimately be expanded to 2 Mb of MOS memory (see Series III memory expansion section for ordering information).		
	499	Credit for 128kb system		
	500	Credit for 192kb system		
	501	Credit for 256kb system		
	502	Credit for 320kb system		
	503	Credit for 384kb system		
	504	Credit for 448kb system		
	505	Credit for 512kb system		
	532	Deletes selector channel replacement board. For systems without selector channels (i.e. HP 2888 disc-based).		
	533	Upgrades second selector channel. For systems with two selector channels.		

PRODUCT NUMBER	OPTION	DESCRIPTION	PRICE	MONTHLY MAINT. CHARGE
		HP 3000 Series III System		
32421A		**HP 3000 Series III Computer System,** 120/208V, 60 Hz, 3-phase; 256kb memory, 50 Mb Disc, 1600 bpi mag tape, 2640B console, 16 port asynchronous terminal controller, 2 system cabinets and table, capacity for 32 asynchronous terminal ports, and MPE III operating system. Initial payment for Fundamental Operating Software (SPL, EDIT, FCOPY, SORT, Compiler Library) — 48 additional monthly software fee payments required. Complete manual set.		
	002	Prepaid purchase option of Fundamental Operating Software.		
	015	230V, 50 Hz single-phase operation. Isolation transformer not supplied.		
	050	Deletes isolation transformer		
	110	Adds 202S type modem control to asynchronous terminal controller		
	125	Replace 7920 (50 Mb disc) with 7925 (120 Mb disc)		
	130	Replace 1600 bpi mag tape unit with 800 bpi		
	135	Replace 2640B CRT console with 2635A 180 CPS dot matrix printing terminal.		
	200	Additional I/O cabinet. Adds 13 I/O slots and capacity for an additional 32 asynchronous terminal ports (total 63)		
	505	Expands memory to 512kb		
	506	Expands memory to 768kb		
	507	Expands memory to 1024kb		
	509	Expands memory to 1536kb		
	511	Expands memory to 2048kb		
		HP 3000 Series III I/O Expansion Products		
30032B		**Asynchronous Terminal Controller.**		
	001	For 103 type modems only		
	002	For 103 and 202S type modems		
30408A	002	**I/O Expansion Kit for HP 3000 Series III.** Adds 1 cabinet with 13 I/O slots and capacity for an additional 32 asynchronous terminal ports.		
		Field-Installed HP 3000 Series III Memory Expansion		
30418A		**1536kb Memory Expansion Kit.** For all HP 3000 Series III's. Expands system memory from 1024kb to 1536kb. See notes below for prerequisites. To expand to the full 2048kb, order two 30008B 256kb memory array boards.		
	001	Adds one 30311A power supply. Required for all Series III's Also required for any Series III upgraded from a Series II which had only one 30311A power supply.		
		Prerequisites: *You must have a Series III with 1024kb of memory purchased as either a new system option or as an upgrade with a 30417A Series II upgrade kit.*		
		If your HP 3000 Series III was upgraded from an HP 3000 Series II Model 5 or 7 and you wish to expand to 1536kb of memory or greater, you must order a 30408A-002 I/O expansion kit as a prerequisite to ordering the 30418A Series III memory expansion kit.		
30008B		**256kb Memory Array.** For use in Series III systems only.		
		Note: Only 256kb, 512kb, 768kb, 1024kb, 1536kb, and 2048kb memory sizes are supported. When ordering additional memory (30008B) make sure that the total system memory is equal to one of the supported sizes.		

PRODUCT NUMBER	OPTION	DESCRIPTION	PRICE	MONTHLY MAINT. CHARGE

Disc Memories and Controllers (for Series II, III)

30229A		**7920S/7925S Controller.** Interfaces up to eight 7920S/7925S drives to an HP 3000 Series II or III. Requires 30030B Selector Channel (30030A for pre-Series II 3000s).		
7920S		**Add-on 50 Mb Disc Drive.** Includes 7920 drive in cabinet, 13394A pack, and cables.		
	001	Specify this option for first 7920 in system. Substitutes 18 ft. multi-unit and 25 ft. data cable for standard 8 ft. and 50 ft. cables.		
	015	230V, 50 Hz, single phase operation		
7925S		**120 Mb Add-on Disc Drive.** Includes 7925 drive in cabinet, 13356A pack, and cables.		
	001	Specify this option for first 7925 disc in system. Substitutes 18 ft. multi-unit and 25 ft. data cable for standard 8 ft. and 50 ft. cables.		
	015	230V, 50 Hz, single phase operation		
	250	Field installed 30229A Controller upgrade for 7925 disc support. Required for all 30229A Controllers shipped prior to June 1978 (approximate). Upgrades device controller board from 13037-60002 to 13037-60028 and the error correction board from 13037-60004 to 13037-60024.		
13394A		**7920 Disc Pack**		
13356A		**7925 Disc Pack**		

Computer Museum

Magnetic Tape Drives and Controllers (for Series II, III)

30215A		**Mag Tape Controller.** Interfaces up to four 7970B or 7970E mag tapes with 300 level options to an HP 3000 Series II or III.		
7970B		**800 bpi 45 ips Mag Tape.** Must order option 310 or 314 to interface drive to an HP 3000 Series II or III.		
	310	Specify this option for add-on drives (2nd, 3rd, and 4th drive) on 30215A controller. Includes HP 3000 cabinet and 20 ft. multi-unit cable.		
	314	Specify this option for first drive on a 30215A mag tape controller. Includes HP 3000 cabinet and HP 3000 interface cable.		
7970E		**1600 bpi, 45 ips Mag Tape.** Must order option 310, 311, or 314 to interface drive to an HP 3000 Series II or III.		
	310	Specify this option for 2nd, 3rd, and 4th master drive on 30215A controller. Includes HP 3000 cabinet and multi-unit cable.		
	311	Specify this option for 2nd, 3rd, and 4th slave drive on 30215A controller. Includes HP 3000 cabinet and slave multi-unit cable. Must be used with a master unit.		
	314	Specify this option for first drive on a 30215A controller. Includes HP 3000 cabinet and HP 3000 interface cable.		

Notes: *One drive must be a master.*

Master/slave electronic relationship: Two masters on the same controller offer greater redundancy than a master and a slave. With the master/slave relationship, the slave shares the master's electronics; the slave will not function if the master is not operative. With a master/master relationship, if the first master is not operative it does not affect the second master's performance.

PRODUCT NUMBER	OPTION	DESCRIPTION	PRICE	MONTHLY MAINT. CHARGE
		Line Printers and Controllers (for Series II, III)		
30209A		**Line Printer Controller.** Interfaces one 2607A, 2613A, 2617A or 2618A printer with option 300 to an HP 3000 Series II, III.	1275	7
2613A		**300 lpm Line Printer.** With 136 columns, 64 characters; 115V, 60 Hz		
	001	96 character set		
	002	64 character set with OCR-B font. Slug character replaces backslash		
	003	96 character set with OCR-B font as above		
	015	230V, 50 Hz, single-phase operation		
	016	96 character set and 230V, 50 Hz operation		
	300	Adds HP 3000 interface cable, documentation, and installation		
2617A		**600 lpm Line Printer.** With 136 columns, 64 characters, 115V, 60 Hz		
	001	96 character set		
	002	64 character set with OCR-B font. Slug character replaces backslash		
	003	96 character set with OCR-B font as above		
	015	230V, 50 Hz, single-phase operation		
	300	Adds HP 3000 interface cable, documentation, and installation		
2618A		**1250 lpm Line Printer.** With 132 columns, 64 characters; 115V, 60 Hz		
	001	96 character set		
	002	64 character set with OCR-B font. Slug character replaces backslash		
	003	96 character set with OCR-B font as above		
	015	230V, 50 Hz, single-phase operation		
	300	Adds HP 3000 interface cable, documentation, and installation		
2608A		400 LPM Dot Matrix	9250	~~76~~
	015			

Series II, III Peripheral Cables

Discs

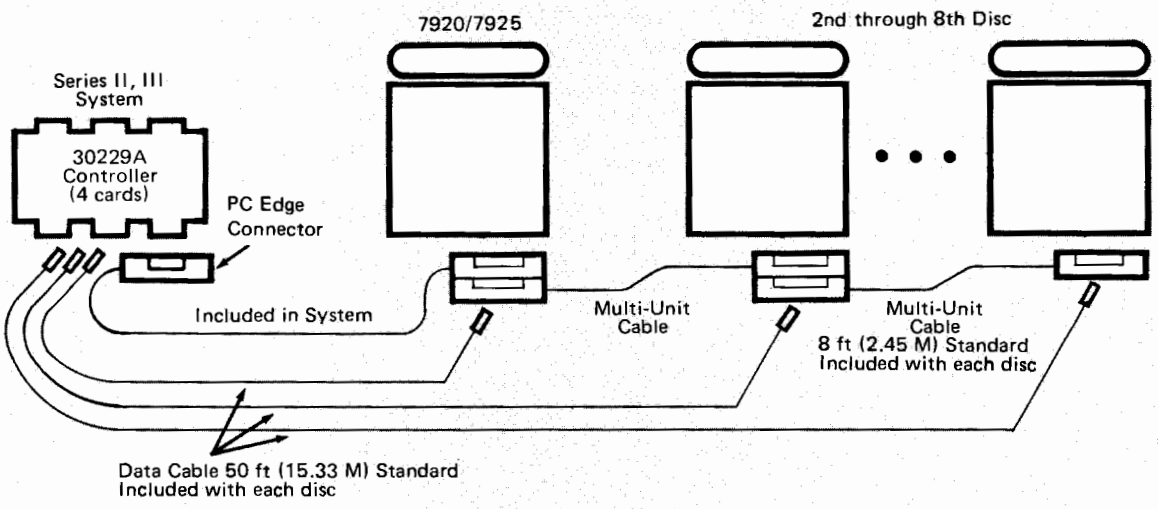

Printers

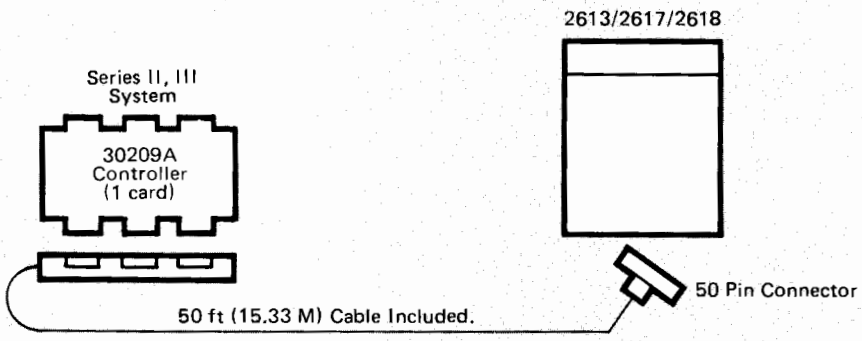

Magnetic Tapes

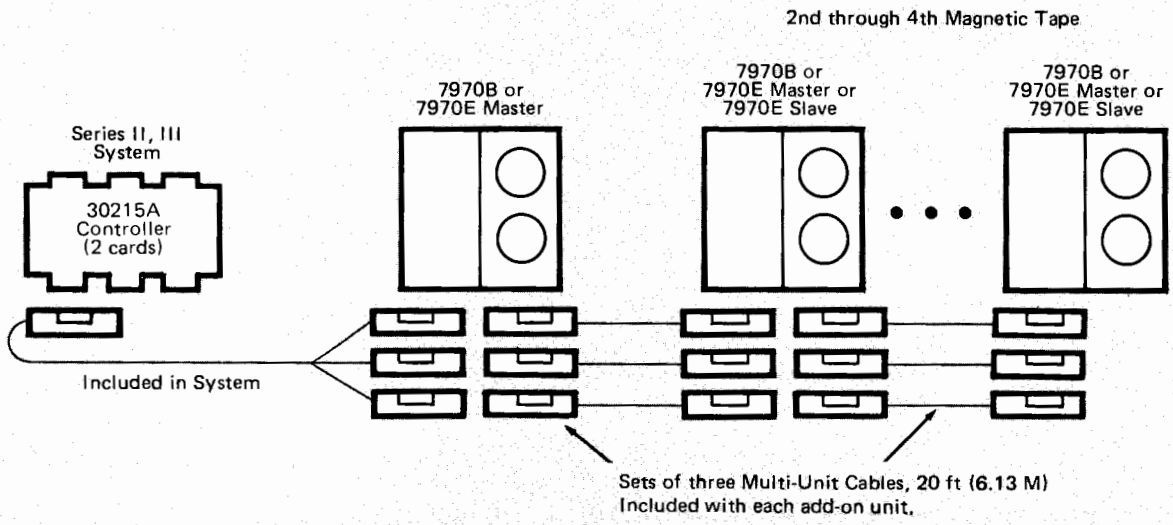

PRODUCT NUMBER	OPTION	DESCRIPTION	PRICE	MONTHLY MAINT. CHARGE

Card I/O, Paper Tape I/O and Plotter Interface (for Series II, III)

30106A — **Card Reader and Controller.** 600 cpm; 115V, 60 Hz. Includes HP 2893A card reader, controller/interface, device diagnostic software, and 2893A card reader manual No. 30106-90001.

015 — 230V, 50 Hz single-phase operation.

30119A — **Card Reader/Punch and Controller.** Reads 176-200 cpm, punches 45-75 cpm; 115V, 60 Hz. Includes card reader/punch, 30219A universal interface package consisting of interface card and cable, device diagnostic software.

Operating Supplies (quantity discounts available):
9320-1430 – box of 2000 80-column cards (2 boxes supplied)
9260-0373 – ink cartridge (2 supplied)

30104A — **Paper Tape Reader and Controller.** Reads 500 cps at 60 Hz, 420 cps at 50 Hz. Includes tape reader, rack mounting kit, controller/interface, device diagnostic software, and manual (30104-90001).

001 — Add Series II, III cabinet.

Operating Accessory Available:
12575C Paper Tape Winder, 115V, 60 Hz/battery. Includes rechargeable battery.

30105A — **Paper Tape Punch and Controller.** Punches 75 cps. Includes tape punch, controller/interface, device diagnostic software, and manual (30105-90001).

Operating Supplies:
Paper Tape, 1 inch wide (2.54 cm), 1000 ft roll (304.8 m)
HP part No. 9280-0063

Mylar Tape, 1 inch wide (2.54 cm), 500 ft roll (152.4 m)
HP part No. 0460-0747

001 — Adds Series II/Series III cabinet.

Note: The paper tape and paper tape punch subsystems together require 17 vertical inches of cabinet space. One subsystem or both may be installed below the magnetic tape drive on a three bay system, if no other equipment occupies that space. Option 001 must be ordered if this space is not available.

30126A — **CalComp 565 Series Plotter Interface**

001 — CalComp 702 series plotter interface

PRODUCT NUMBER	OPTION	DESCRIPTION	PRICE	MONTHLY MAINT. CHARGE

Distributed Systems/Communications Products (for Series II, III)

30055A		**Synchronous Single Line Controller.** For modem links. Cable to modem included.		
	001	Replaces modem cable with cable to run MTS/3000 in hardwired asynchronous mode.		
30360A		**Hardwired Serial Interface.** For coaxial links. A 30220A cable is required for each pair of hardwired serial interfaces.		
30220A		**Coaxial Cable.** For hardwired serial interface. 25 ft. long.		
	001	100 ft. cable		
	002	250 ft. cable		
	003	500 ft. cable		
	004	1000 ft. cable		
	005	2000 ft. cable		

Note: The DS/3000 modem link is implemented on the HP 3000 Series II/III with a Synchronous Single Line Controller (30055A).

The DS/3000 hardwired coaxial link is implemented on the Series II/III with the Hardwired Serial Interface (30360A) and coaxial cabling (30220A).

MTS/3000, MRJE/3000 and RJE/3000 require the Synchronous Single Line Controller (30055A).

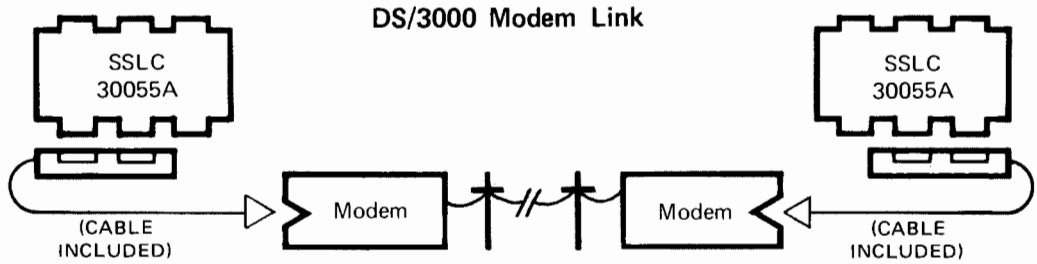

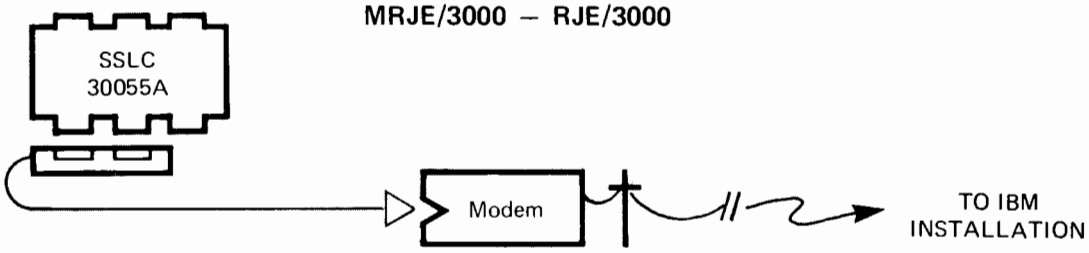

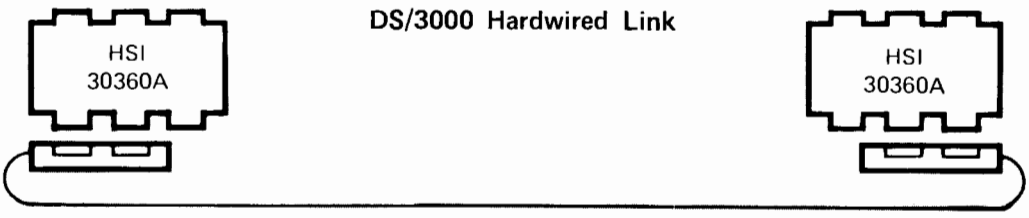

PRODUCT NUMBER	OPTION	DESCRIPTION	PRICE	MONTHLY MAINT. CHARGE

Multipoint Terminal System/Communications Products (for Series II, III)

To configure a multipoint line for your HP 3000, choose components from the following six areas:

1. MTS/3000 software (needed only once on the system, even if multiple lines are supported).
2. 30055A Synchronous Single Line Controller with appropriate cable (one required for each line) (maximum of seven 30055A's per system).
3. Appropriate 2641A, 2645A, or 2648A Terminals (see Terminal Pricing Section).
4. Multipoint communications interfaces for the above terminals.
5. Appropriate cables from the cable diagrams below.
6. One or more Asynchronous Repeaters as required.

System Software and Hardware Interface

32193A		**MTS/3000 Software**		
30055A		**Synchronous Single Line Controller (SSLC).** Includes 30055-60008 Synchronous Cable. Length 25 feet (7.63 m).		
	001	Replaces standard synchronous (30055-60008) cable with asynchronous (30055-60010) cable for hardwired asynchronous operation. Length 25 feet (7.63m).		
30037A		**Asynchronous Repeater (AR).** Includes adapter cable (30037-60003).		
	015	230V operation		

Terminal Multipoint Interfaces

13260C		**Asynchronous Multipoint Communications Interface.** For daisy chained line sharing. Not for 2640A/B or 2644A terminals. Option 030 must be ordered with each terminal to delete the standard asynchronous interface.		
	001	Add monitor mode capability. Allows any terminal in a drop to monitor all data transmitted to and from all terminals beyond it in the drop.		
13260D		**Synchronous Multipoint Communications Interface.** For daisy chained line sharing. Not for 2640A/B or 2644A terminals. Option 030 must be ordered with each terminal to delete the standard asynchronous interface.		
	001	Add monitor mode capability. Allows any terminal in a drop to monitor all data transmitted to and from all terminals beyond it in the drop.		

Cables — See diagrams next page

13232N		**Asynchronous Repeater Terminal Cable.** 15 feet (4.57m).		
13232P		**Modem Multipoint Cable.** Each leg 15 feet (4.57m).		
13232Q		**Multipoint Cable.** Each leg 15 feet (4.57m).		
13232R		**Multipoint Extension Cable**		
13232T		**Power Protect Multipoint Cable.** Each leg 15 feet (4.57m).		
13232U		**Modem Bypass Cable.** 5 feet (1.52m).		

HP 3000 Series II and III
MTS/3000 Asynchronous Cable Configurations—Hardwired

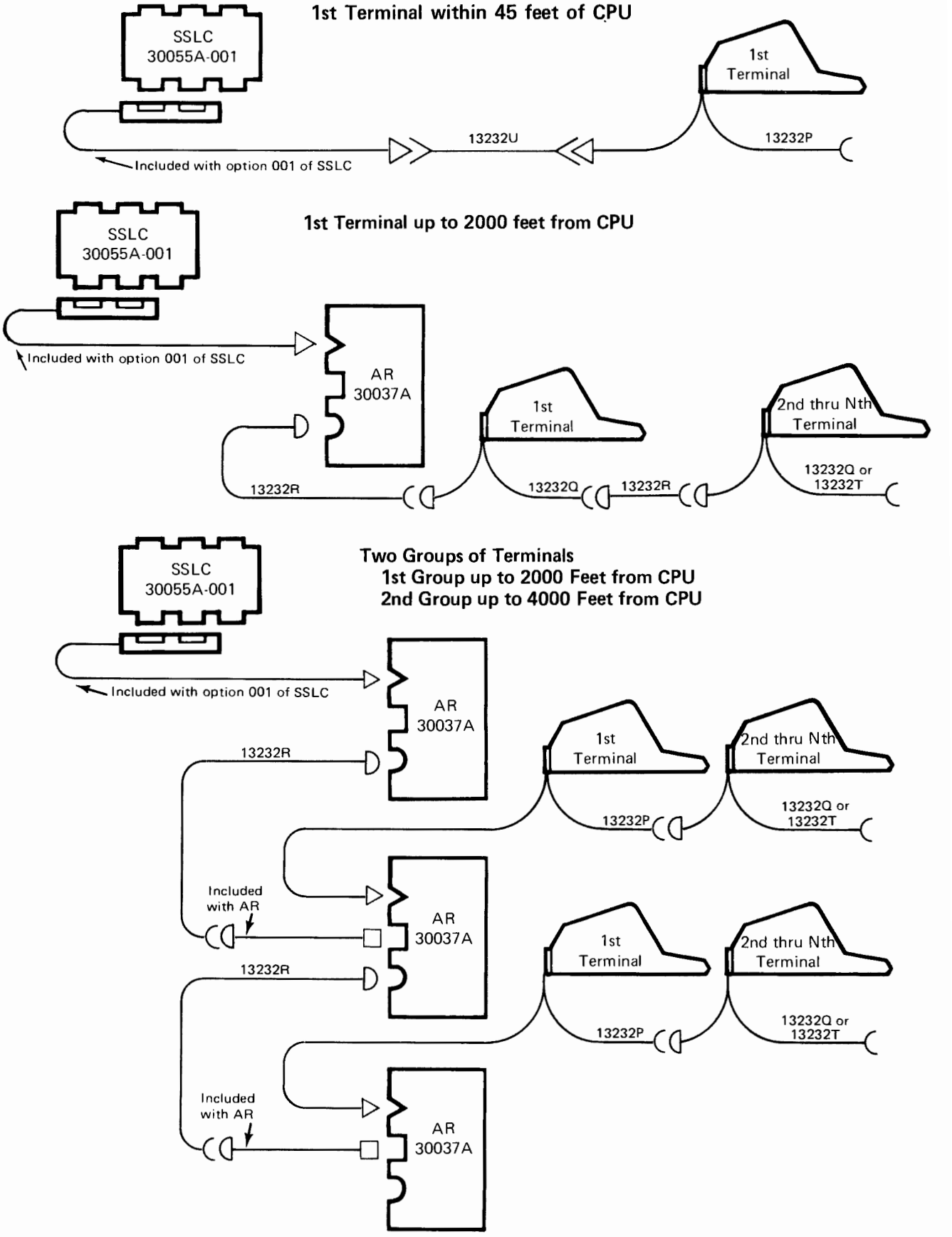

HP 3000 Series II and III
MTS/3000 Synchronous Cable Configurations

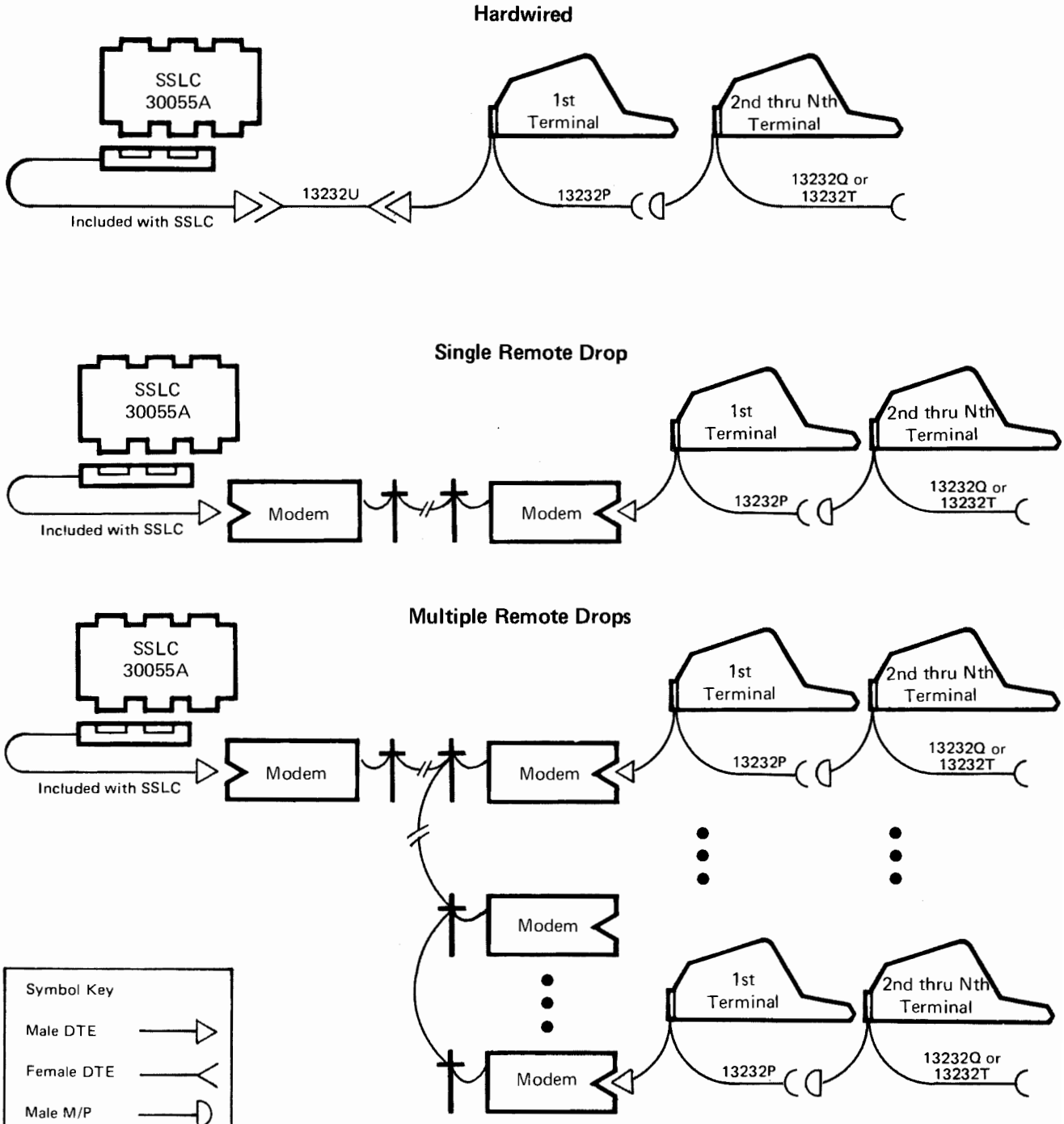

Note 1: Extension cables may be used between synchronous terminals. The allowable length is a function of line speed. Refer to the MTS/3000 site preparation manual (32193-90001).

Note 2: The 13232T cable is the same as 13232Q except this cable is equipped with terminal power down re-routing relay. If one terminal uses this cable and its power is lost, the other terminal in the chain will not be affected.

Note 3: 13232R cable may be replaced by a customer; fabricated equivalent up to 610 meters (2000 Ft).

PRODUCT NUMBER	OPTION	DESCRIPTION	PRICE	MONTHLY MAINT. CHARGE
		Interactive Display Terminals (for Series 33, II, III)		
2640B		**Display Terminal**		
	001	128 character set adds lower case and displayable control codes		
	015	220V, 50 Hz operation		
	016	115V, 50 Hz operation		
2645A		**Display Station**		
2641A		**APL Display Station** (Series II, III only)		
2647A		**Intelligent Graphics Terminal**		
2648A		**Graphics Terminal**		
		The following options apply to 2645A, 2641A, 2647A, and 2648A except as noted.		
	001	128 character set adds lower case and displayable control codes. For 2641A only.		
	007	Integrated dual cartridge tapes (standard on 2647A)		
	013	5 mini-cartridges		
	015	220V, 50 Hz		
	016	115V, 50 Hz		
	030	Delete standard asynchronous communications interface for multi-point applications. Order 13260 product to support multipoint communications.		
	031	Delete standard asynchronous communications interface to free one option slot. (For 2647 only)		
		Note: Cable is not included with display terminals. Order separately as described in Point-to-Point Cable Configuration diagrams.		
		Terminal Expansion		
13234A		**Terminal 4K Memory Module**		
13231A		**Display Enhancements** – blinking, half bright, underline, and 64 character line drawing		
	201	Add Math Symbols Alternate Character Set		
	203	Add Large Character Alternate Character Set		
13240A		**Option Slot Extender.** Adds 5 slots for 2640 Terminals only		

Note: See Terminal Option Summary Chart on next page for complete details.

Interactive Display Terminal Option Summary Chart

	2640B	2641A	2645A	2647A	2648A
Maximum Baud Rate (see Note 1)	2400	9600	9600	9600	9600
Memory	1-8 kb	4-12 kb	4-12 kb	9 kb max.	8-12 kb
Block or character mode (see Note 2)	STD	STD	STD	STD	STD
Inverse Video	STD	STD	STD	STD	STD
Underline, Half-bright, Blinking (Available by ordering 13231A)	AVAIL	STD	AVAIL	AVAIL	AVAIL
User-definable Soft Keys	N/A	8 STD	8 STD	8 STD	9 STD
Option slots supplied	2	5	7	1	4
Character set supplied (see Note 4)	64 Roman	64 Roman + 128 APL	128 Roman	128 Roman	128 Roman
64 character (upper case)					
128 character (adds lower case/displayable control codes)					
Other (see Note 3)				Graphics & Intelligence	Graphics features
Lower case/displayable control codes (see Note 4)	128 Roman	128 Roman	STD	STD	STD
Integrated dual cartridge tapes	N/A	OPT	OPT	STD	OPT
5 mini-cartridges	N/A	OPT	OPT	OPT	OPT
220V, 50 Hz operation	OPT	OPT	OPT	OPT	OPT
115V, 50 Hz operation	OPT	OPT	OPT	OPT	OPT
Delete standard asynchronous communications interface	N/A	OPT	OPT	OPT	OPT
Add math symbols alternate character set	AVAIL	OPT	AVAIL	AVAIL	AVAIL
Add large character alternate character set (Alternate character sets available by ordering 13231A)	AVAIL	OPT	AVAIL	AVAIL	AVAIL

KEY:

STD—Standard with terminal, OPT—Option ordered with terminal, AVAIL—Order separate product.

NOTES:

1. The maximum data rate is 2400 baud for 2640 series terminals on HP 3000 Series 33, II, III systems. HP 2645 series terminals equipped with Multidrop hardware connected to the Synchronous Single Line Controller (SSLC) on HP 3000 Series II, III systems can operate at 9600 baud.
2. Terminals on the HP 3000 normally operate in character mode, except when accessed via DEL/3000, VIEW/3000, or MTS/3000 where block mode is employed.
3. The 2647A and 2648A are supported on the HP 3000 as a 2645A. Development of software to make full use of graphics features and intelligent terminal capabilities on the HP 3000 is the responsibility of the user.
4. Non-standard characters in the International character sets and the display enhancement control characters must be handled by user application programs.

PRODUCT NUMBER	OPTION	DESCRIPTION	PRICE	MONTHLY MAINT. CHARGE
		Printing Terminal (for Series 33, II, III)		
2635A		**Printing Terminal.** 180 characters per second. Automatic bidirectional printing, underline and display function modes. 8 channel fixed VFU (non-programmable). EIA RS232C interface without modem control. (For use with 103-type modems or some hardwired applications.) 120 volts, 48-62 Hz. Includes terminal and 12.5 ft male-to-male cable.		
	015	220V, 48-62 Hz		
	715	Adds service documentation		
		Additional Products:		
26097A		**Stand for 2635A**		
	001	Add Casters		
	002	Add paper catcher		
		02631-60060 Ribbon cartridge-unit price, qty 1		
		qty 6		
		qty 12		
		Note: Print head included in monthly maintenance charge.		
		Terminal Cables (for Series 33, II, III)		
30062B		**Data Set Cable.** Connects HP 3000 Asynchronous RS-232 port to a Bell 103 or 202S type modem; 25 feet (7.6m) long with male-to-male RS-232C connectors.		
	001	Replace 25 foot (7.6m) cable with 50 foot (15.2m) cable		
30062C		**Extender Cable.** Multipurpose extension, 25 feet (7.6m) long with male-to-female RS 232C connectors. All 25 pins connected end to end.		
	001	Replaces 25 foot (7.6m) cable with 50 foot (15.2m) cable		
	002	Replaces 25 foot (7.6m) cable with 100 foot (30.4m) cable		
30062D		**System Console Extender Cable.** (Series II, III only). Hardwired applications only; 25 feet (7.6m) long with male-to-female RS-232C connectors; three wires (send, receive, common) connected.		
13232A		**Terminal Cable.** (name on hood: 103/202 modem cable); connects 2640 series terminals to 103 or 202 type modem or to HP 3000 System; 15 feet (4.6m) long with male-to-PC edge connector connectors.		
13232M		**European Modem Cable.** For connection of 2640 series terminals to European modems; 15 ft. (4.6m) long with male-to-PC edge connector connectors		

Point-to-Point Cable Configurations

Series 33

Asynchronous Data Communications Controller

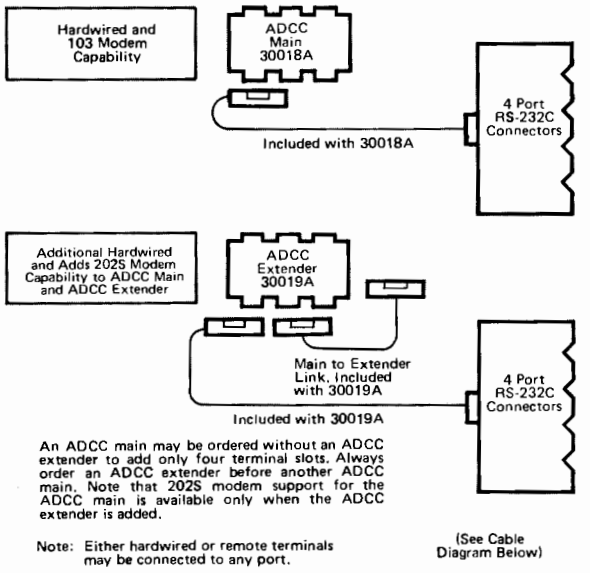

Series II/III

Add-on Asynchronous Terminal Controller

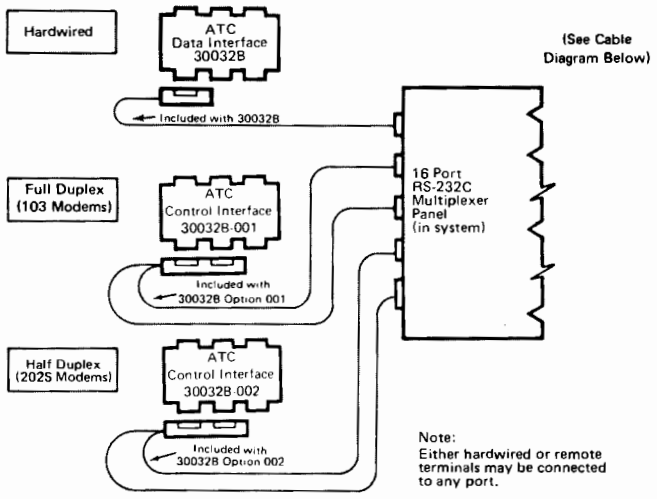

Common cabling requirements

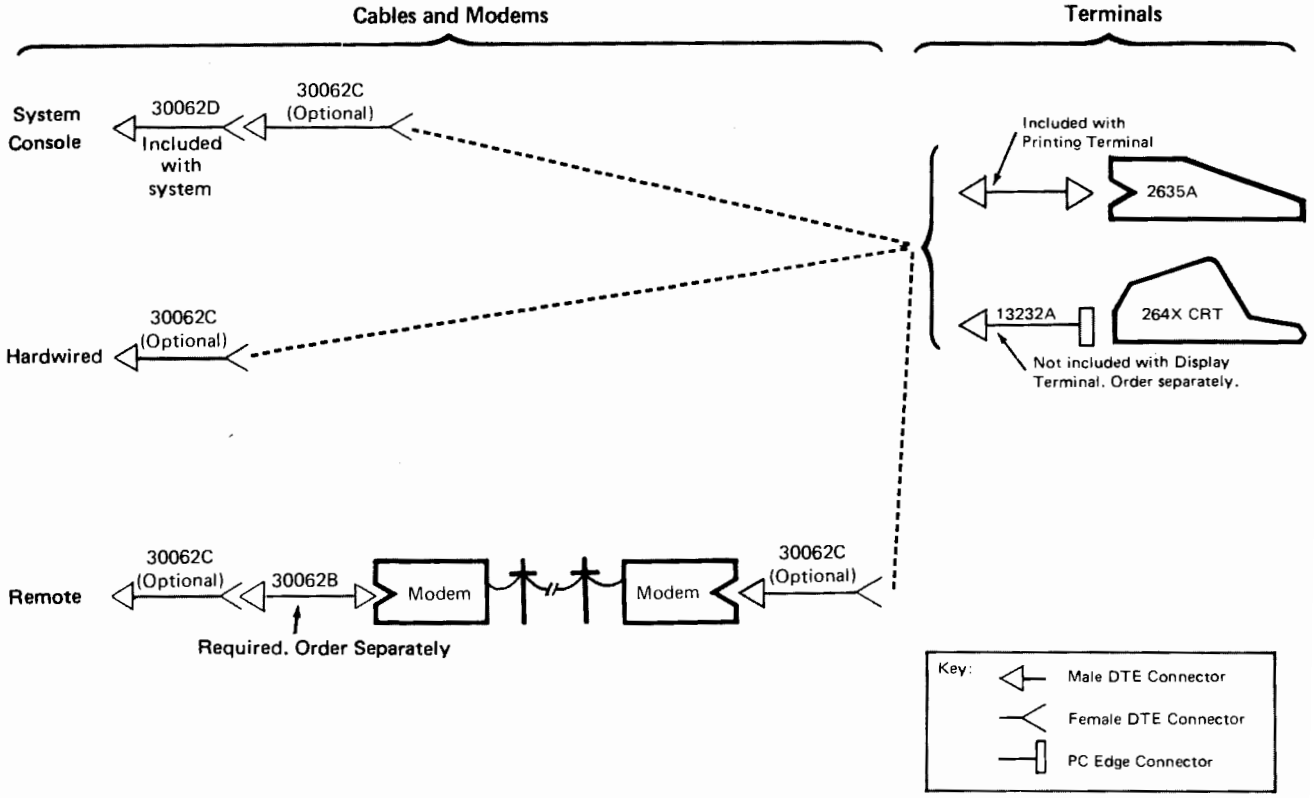

PRODUCT NUMBER	OPTION	DESCRIPTION	PRICE	MONTHLY MAINT. CHARGE

HP 3000 Manuals

30381A		**HP 3000 Series 33, Series II and Series III User Manual Set.** *Note: This product provides manuals shipped in advance of the system (See Reference Sheet).*		
	600	Add BASIC/3000 Compiler and Interpreter manuals		
	601	Add FORTRAN/3000 Reference Manual and Scientific Library Reference Manual		
	602	Add: IMAGE/3000 Reference Manual QUERY/3000 Reference Manual COBOL/3000 Reference Manual RPG Reference Manual RPG Listing Analyzer Data Entry Reference Manual KSAM Reference Manual		
	699	Deletes binders		

PRODUCT NUMBER	DESCRIPTION	PRICE

Training and Consulting

22801A	**HP 3000 — A Comprehensive Introduction.** Five-day course given at an HP Technical Center. Tuition per student.
22815A	**HP 3000 — A Comprehensive Introduction.** Five-day course given on site.
22802B	**HP 3000 System Management and Operation.** Five-day course given at an HP Technical Center. Tuition per student.
22816A	**HP 3000 System Management and Operation.** Five-day on-site course.
22956A	**HP 3000 IMAGE (Data Base Management).** Five-day course given at an HP Technical Center. Tuition per student.
22827A	**HP 3000 IMAGE (Data Base Management).** Five-day on-site course.
22805A	**HP 3000 Series II and Series III Special Capabilities.** Five-day course given at an HP Technical Center. Tuition per student.
22804A	**HP 3000 SPL File System Introduction.** Five-day course given at an HP Technical Center. Tuition per student.
22817B	**IBM System/3-to-HP 3000 Conversion.** A three-day on-site course.
22817T	**IBM System/3-to-HP 3000 Conversion.** A three-day course given at an HP Technical Center. Tuition per student.
22818A	**HP 3000CX or Series I-to-HP 3000 Series II Conversion.** A one-day on-site course.
22819A	**HP 3000 Data Entry Library.** A one-day on-site course.
22828A	**KSAM (Keyed Sequential Access Method).** A two-day on-site course.
36900E	**Distributed Systems/3000.** A three-day on-site course.
22825A	**HP 3000 Software Consulting.** A consultation service to help in applying HP software to your specific applications problems. Cost per day.

Note: Fee for on-site classes includes up to 10 students. Additional students (up to the maximum permissible) can be accommodated.

Hewlett-Packard reserves the right to cancel any class upon three-weeks notice.

Series 33 Configuration Example

Computer Museum

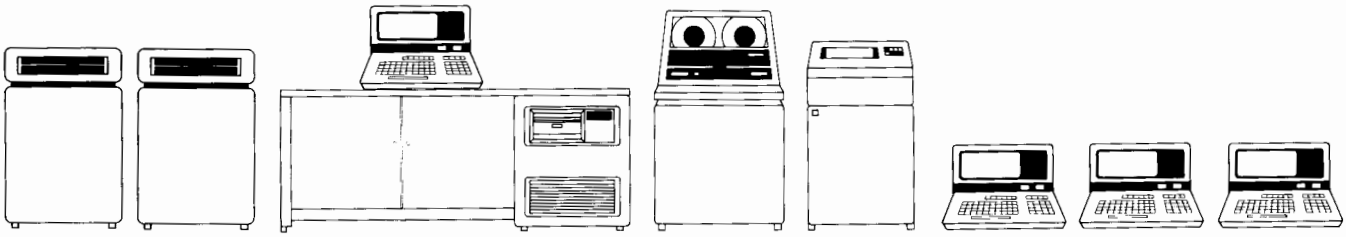

120 Mb Disc | 50 Mb Disc | Series 33 (60 Hz) | 1600 bpi Magnetic Tape | 400 lpm Printer with Sound Cover | 3 Terminals

PRODUCT NUMBER	UNITS	PRODUCT	PRICE	MONTHLY MAINT. CHARGE
32412A	1	Series 33 (60 Hz)		
32412A-120	1	50 Mb system disc		
7925S	1	120 Mb disc		
30078A	4	Expand to 768kb memory		
7970E	1	1600 bpi magnetic tape		
7970E-426	1	Specify HP-IB controller		
30079A	1	General I/O controller		
31389C	1	HP-IB cable for magnetic tape		
2608A	1	400 lpm printer		
2608A-333	1	Specify HP-IB controller		
2608A-110	1	Add sound cover		
31389B	1	Printer cable		
31389B	1	Printer cable extension		
2640B	2	Interactive display terminals		
2648A	1	Graphics terminal		
13232A	3	Terminal cables		

HP 3000 Software Ordering Example: Plan 2 (prepaid plan)

PRODUCT	INITIAL PAYMENT			PREPAID OPTION			PREPAID MONTHLY FEES		
	QTY	PROD. NO.	PRICE	QTY	PRODUCT NUMBER	PRICE	QTY	PRODUCT NUMBER	PRICE
FOS	1			1	32412A-002*		12	22823A	
COBOL	1	32213C		1	32213C-002		12	22823A-003	
DBMS	1	32235B		1	32235B-002		12	22823A-008	

** Use the proper HP 3000 system product number when ordering prepaid option for FOS.*

Note: On all HP 3000 Series 33, Series II, or Series III Systems, software may be ordered through PLAN 2 shown above or through PLAN 1 shown on the next page.

Series III Configuration Example

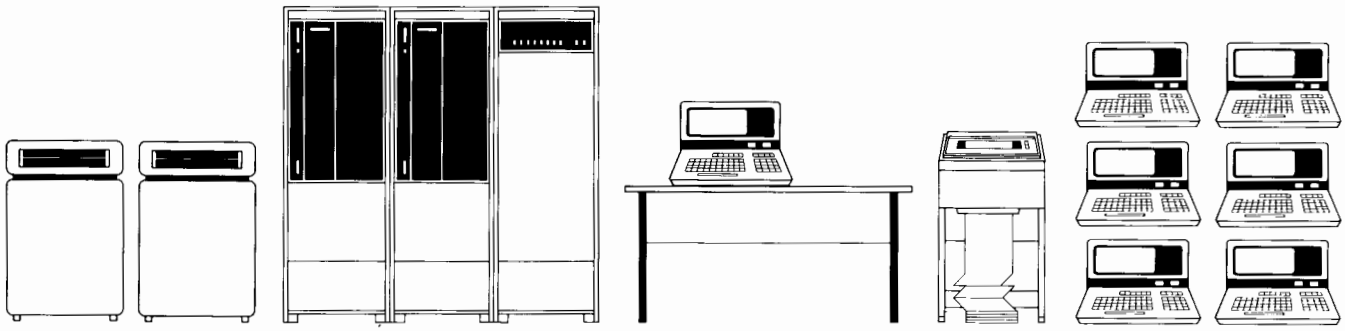

50 Mb Disc | 120 Mb Disc | 1600 bpi Magnetic Tape | 1600 bpi Magnetic Tape | 1 Mb Memory | Series III Console and Desk | 600 lpm Printer | 6 Terminals

PRODUCT NUMBER	UNITS	PRODUCT	PRICE	MONTHLY MAINT. CHARGE
32421A	1	Series III		
32421A-507	3	Expand to 1 Mb memory		
7925S	1	120 Mb disc		
7970E	1	2nd 1600 bpi magnetic tape		
7970E-311	1	Specify slave drive		
2617A	1	600 lpm printer		
2617A-300	1	Specify HP 3000 I/F cable		
30209A	1	Line printer controller		
2640B	3	Interactive display terminals		
2645A	2	Interactive display stations		
2647A	1	Intelligent Graphics terminal		
13232A	6	Terminal cables		

HP 3000 Software Ordering Example: Plan 1 (48 monthly payments)

PRODUCT	QTY	INITIAL PAYMENT		QTY	MONTHLY FEES	
		PRODUCT NUMBER	PRICE		PRODUCT NUMBER	PRICE
FOS	1			48	22823A	
COBOL	1	32213C		48	22823A-003	
DBMS	1	32235B		48	22823A-008	

Note: On all HP 3000 Series 33, Series II, or Series III Systems, software may be ordered through PLAN 1 shown above or through PLAN 2 shown on the previous page.

Peripherals Site Preparation Data

Electrical Power: These peripherals for the HP 3000 operate on 115 volt, 60 Hz, single phase (U.S.) or optionally on 230 volt, 50 Hz, single phase (International).

Installation: Installation is provided by a factory-authorized Customer Engineer and is included in the list price of all peripherals.

Peripherals Summary Data					U.S.A.		
Description			Current Per Phase	Heat Output Per Hour	Weight (Net)	Series 33 Cable Lengths	Series II/III Cable Lengths
Disc Drives	7906S	20 Mb Drive (Series 33)	6.3A	2800 BTU	270 lb	Notes 1,4	
	7920S	50 Mb Drive	4.7A	2355 BTU	315 lb	Notes 1,4	Note 1
	7925S	120 Mb Drive	4.9A	1366 BTU	320 lb	Notes 1,4	Note 1
Magnetic Tape Drives	7970B	800 BPI Drive	3.4A	2747 BTU	290 lb	Notes 4,5	Note 5
	7970E	1600 BPI Drive	3.4A	2747 BTU	290 lb	Notes 4,5	Note 5
Line Printers	2608A	400 LPM (Series 33)	7.3A	2900 BTU	215 lb	Note 3	
	2613A	300 LPM	10A (22A Surge)	3376 BTU	340 lb		50 ft.
	2617A	600 LPM	10A	3886 BTU	390 lb		50 ft.
	2618A	1250 LPM	17A (50A Surge)	6674 BTU	800 lb		50 ft.
	2631A	180 CPS (Series 33)	2.6A	905 BTU	51 lb	Note 3	
Display Terminals	2640X	All Models	1.8A	706 BTU	44 lb	15 ft.	15 ft.
	2641A	APL Station	1.8A	706 BTU	44 lb	15 ft.	15 ft.
	2645X	All Models	2.2A	863 BTU	50 lb	15 ft.	15 ft.
	2647A	Intelligent Graphics	2.2A	863 BTU	50 lb	15 ft.	15 ft.
	2648A	Graphics Terminal	2.2A	863 BTU	50 lb	15 ft.	15 ft.
Printing Terminal	2635A	180 CPS	2.4A	905 BTU	56 lb	12.5 ft	12.5 ft
Other	30104A	Paper Tape Reader	2.5A	981 BTU	42 lb		Note 2
	30105A	Paper Tape Punch	2A	785 BTU	35 lb		Note 2
	30106A	Card Reader	5.4A (20A Surge)	2120 BTU	75 lb		25 ft.
	30119A	Card Reader/Punch	3.7A	2748 BTU	260 lb		50 ft.
Peripherals Summary Data					INTERNATIONAL		
Disc Drives	7906S	20 Mb Drive (Series 33)	3.7A	700 KCAL	122 kg	Notes 1,4	
	7920S	50 Mb Drive	3A	593 KCAL	142 kg	Notes 1,4	Note 1
	7925S	120 Mb Drive	3A	323 KCAL	145 kg	Notes 1,4	Note 1
Magnetic Tape Drives	7970B	800 BPI Drive	1.7A	710 KCAL	129 kg	Notes 4,5	Note 5
	7970E	1600 BPI Drive	1.7A	710 KCAL	129 kg	Notes 4,5	Note 5
Line Printers	2608A	400 LPM (Series 33)	3.15A	725 KCAL	97 kg	Note 3	
	2613A	300 LPM	5A (11A Surge)	850 KCAL	155 kg		15.2m
	2617A	600 LPM	5A	979 KCAL	168 kg		15.2m
	2618A	1250 LPM	8.5A (25A Surge)	1682 KCAL	363 kg		15.2m
	2631A	180 CPS (Series 33)	1.3A	228 KCAL	24 kg	Note 3	
Display Terminals	2640X	All Models	0.8A	178 KCAL	20 kg	4.5m	4.5m
	2641A	APL Station	0.8A	178 KCAL	20 kg	4.5m	4.5m
	2645X	All Models	1.0A	217 KCAL	23 kg	4.5m	4.5m
	2647A	Intelligent Graphics	1.0A	217 KCAL	23 kg	4.5m	4.5m
	2648A	Graphics Terminal	1.0A	217 KCAL	23 kg	4.5m	4.5m
Printing Terminal	2635A	180 CPS	1.15A	228 KCAL	24 kg	3.8m	3.8m
Other	30104A	Paper Tape Reader	1.25A	247 KCAL	19 kg		Note 2
	30105A	Paper Tape Punch	1A	198 KCAL	16 kg		Note 2
	30106A	Card Reader	2.7A (10A Surge)	534 KCAL	34 kg		7.6m
	30119A	Card Reader/Punch	1.85A	693 KCAL	118 kg		15.2m

Notes:

1. The maximum cumulative length of daisy-chained cable is 74 ft. (22.5m)
2. Rack mounted.
3. Refer to Series 33 cabling diagram for printers.
4. The maximum length of HP-IB cable is 20 ft. (6M).
5. Multi-unit cables 20 ft. (6M).

1 Printer Ribbons
2 Paper → Cost $25 per Box 250 sheets
3 Power
4 Tapes.
5. Disc Pack X6
6.

Sales 12%
Duty 2%

SILTON

CPU ✓
DISC ✓
TAPEDRIVE ✓
SOFTWARE ✓

75,000
4,500
$A 67,500

CHGE FOR SOFTWARE & LOWER PURCHASE PRICE TO 1/2

Depreciation

PRINTER ✓ 3500
PRINTER CONTROLLER ✓ 1250
ISOLATION TRANSFORMER 750 (AUSTRALIAN)

73,000 (Aust)

S. TAX 12% 8760 ← SAVE 4350
DUMP 2% 1460 ← " 700
83,220

7,300
1460
8760

CASH 15,720

MONTHLY REPAYMENTS @ 83,220 = $A 1660
− 5000
78,220 = $A 1500 p.m

SILTON DEAL 15% OF 67,000 = 10,000
$1 BAL IN RENTAL at 1500 US P/M

PLUS STD PREP - $750
USA PREP $500
FREIGHT 1000
2250

ELECTRICAL STD 400
2650

CASH REQUIRED = 3500
1250
750
8760
1460
15,720

Sales tax
Printer
Controller
Isolation Transf

83,220
2650
85,870 @ 2.4

85
2.4
340
1700
2040

67,000

SAY 24 × 1500 = $36,000
24
6000
30000
36,000

31,000

For more information on HP 3000 Computer Systems, contact your local Hewlett-Packard representative, or write

Hewlett-Packard
General Systems Division
Marketing Dept.
5303 Stevens Creek Blvd.
Santa Clara, CA 95050
Telephone (408) 249-7020

In Europe: Hewlett-Packard S.A.
7, rue du Bois-du-Lan,
P.O. Box CH-1217 Meyrin 2
Geneva, Switzerland
Tel: (022) 82 70 00

In Japan: Yokogawa-Hewlett-Packard
59-1, Yoyogi 1 - chome
Shibuya-ku, Tokyo, 151
Tel: 03-370-2281

In Canada: Hewlett-Packard Ltd.
6877 Goreway Drive
Mississauga, Ontario L4V 1L9
Tel: (416) 678-9430

Other International Locations:
Hewlett-Packard
3200 Hillview Ave.
Palo Alto, Calif. U.S.A. 94304
Tel: (415) 493-1501

HEWLETT hp PACKARD

1507 Page Mill Road, Palo Alto, California 94304